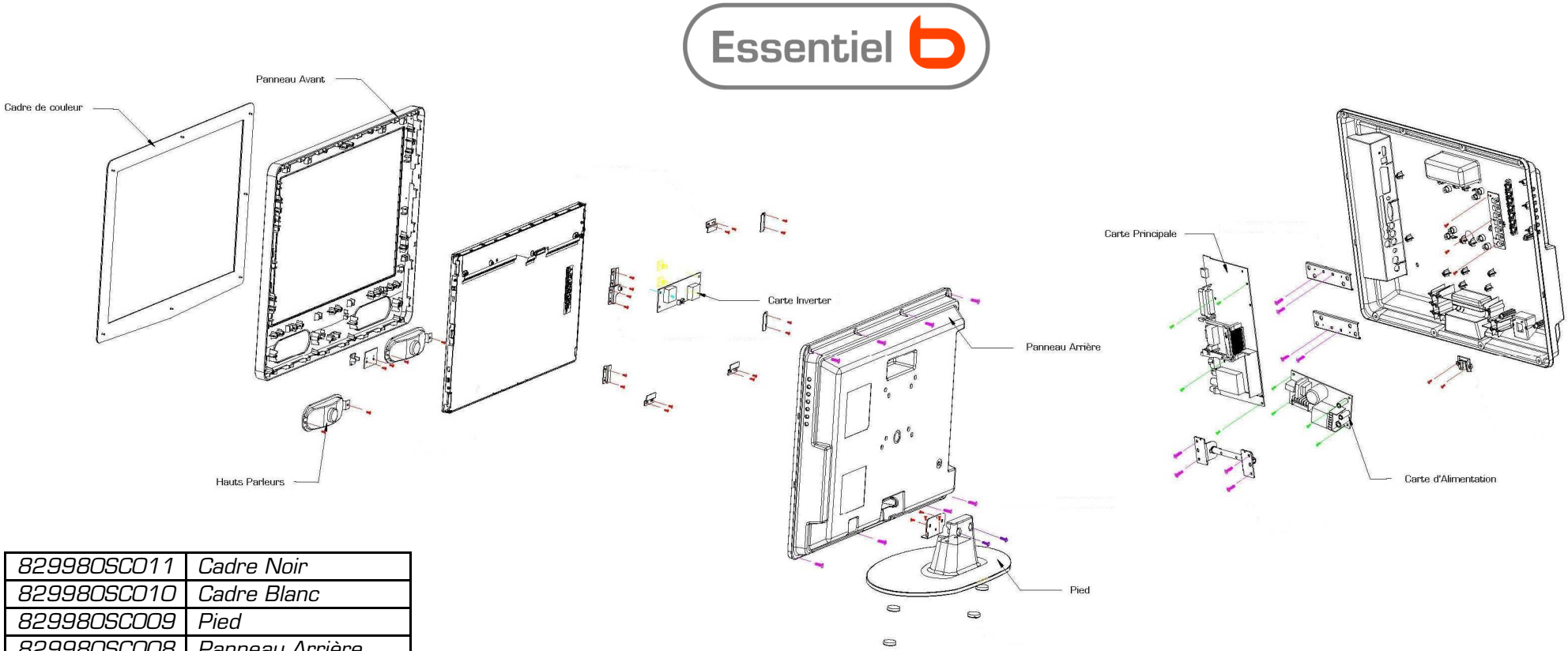

829980SC011	Cadre Noir
829980SC010	Cadre Blanc
829980SC009	Pied
829980SC008	Panneau Arrière
829980SC007	Panneau Avant
829980SC006	Carte Inverter
829980SC005	Télécommande
829980SC004	Hauts Parleurs
829980SC003	Carte d'Alimentation
829980SC002	Carte Principale
829980SC001	Carte Clavier
829980 – KAMEO 19" II	

SERVICE MANUAL

MODEL :KAMEO 19″

CONTENTS

SAFETY PRECAUTION

SPECIFICATION

IC’S GENERAL DESCRIPTION

SPECIAL IC INTRODUCTON

BLOCK DIAGRAM

CIRCUIT DIAGRAM

FACTORY MODE&ADJUSTMENT

TROUBLE SHOOTING

EXPLODED VIEW

UPGRADE SOFTWAR

This manual is the latest at the time of printing, and does not include the modification which may be made after the printing, by the constant improvement of product.

IMPORTANT SAFETY INSTRUCTIONS

This symbol indicates " dangerous voltage " inside the product that presents a risk of electric shock or personal injury.

This symbol indicates important instructions accompanying the product.

Please read this manual carefully before using this product.

- Before connecting the AC power cord ,make sure the voltage designation of the LCD TV corresponds to the local electrical supply .
  If you are unsure of your power supply , ask your local power company .

- Never insert anything metallic into the cabinet openings of the liquid crystal display LCD TV/monitor;otherwise it may create the danger of electric shock.

- To avoid electric shock, Never touch the inside of the LCD TV/monitor .
  Only a qualified technician should open the case of the LCD TV/monitor.

- Never use your LCD TV/monitor if the power cord has been damaged .
  Do not allow anything to rest on the power cord, and keep the cord away from place where people can trip over it .

- Be sure to hold the plug, not the cord, when disconnecting the power cord from an electric socket.

- Openings in the LCD TV/monitor cabinet are provided for ventilation.
  To prevent overheating, these openings should not be blocked or covered. Also, avoid using the LCD TV/monitor on a bed ,sofa ,rug, or other soft surface. Doing so may block the ventilation openings in the bottom of the cabinet. If you put the LCD TV/monitor in a bookcase or some other enclosed space, be sure to provide adequate ventilation.

- Do not expose the LCD TV/monitor to extreme temperature conditions or to extreme humidity conditions.

- The apparatus shall not be exposed to dripping or splashing and that no objects filled with liquids.

- Do not place the LCD TV/monitor on an unstable cart, stand, tripod, bracket, table, or floor where it can fall. It is damaged if dropped, hit or scratched. Do not clean the front with keton-type materials (e.g.Acetone),ethyl alcohol, toluene, ethy lacid, methyl, or chloride-these may damage the panel.
- If your LCD TV/monitor does not operate normally in particular, if there are any unusual sounds or smells coming from it， unplug it immediately and contact an authorized dealer or service enter.
- High temperature can cause problems. Don`t use your LCD TV/monitor in direct sunlight, and keep it away from heaters, stoves, fireplaces, and other sources of heat.
- Unplug the power cord when it is going to be left unused for an extended period of time .
- To reduce the risk of fire or electric shock, and annoying interference, use the recommended accessories only.
- If the LCD TV/monitor is broken, do not try to repair it yourself. Contact qualified service personnel.
- Unplug power cord from the AC outlet before any service.
- Be sure the service technician uses authorized replacement parts or their equivalents. Unauthorized parts may cause fire, electrical shook, or other hazards.
- Following any service or repair, be sure the service technician performs safety checks to certify that your TFT-LCD TV/monitor is in safe operating order.

SPECIFICATION

ITEM	Details Descriptions		
Description	TFT-LCD TV WITH DVB-T RECEIVING, SCART INTERFACE,PC MONITOR ,Y,Pb,Pr INTERFACE (HDTV READY).		
Main Marketing	Europe,UK		
Analog TV System	PAL-DK,I,BG,SECAM BG/DK,SECAM L/L'		Yes
AV System	PAL/SECAM/NTSC3.58&NTSC4.43		Yes
Analog Channel Coverage: (For SECAM BG/DK,PAL BG/DK/I)	VHF-L	E2~S10(48.25~168.25MHz)	Yes
	VHF-H	E5~S41(175.25~463.25MHz)	
	UHF	E21~E69(471.25~855.25MHz)	
Analog Channel Coverage:(For SECAM L)	VHF-L	FA-F(47.75~164.75MHz)	Yes
	VHF-H	F1-Q(176.00~296.75MHz)	
	UHF	21~69(471.25~855.25MHz)	
DVB-T Channel Coverage	VHF-L/VHF-H/UHF	174MHz-----862MHz	Yes
Intermediate Frequencies	Picture I.F.	PAL BG/I/DK,SECAM BG/DK/L: 38.9MHz	Yes
		SECAM L' 33,95MHZz	
		DVB-T : 36.13MHz	
	Sound I.F.	32.4MHz(DK),32.9MHz(I)	Yes
		33.4MHz(BG)	
		SECAM L' 40.45MHz	
Channels Manage	Tuning System		FS With PLL
	Pre-set Channel(For Analog TV)		100
	Pre-set Channel(For DVB-T)		60
	Tuner Band		Hyper Band
	Auto Channel Scanning		Yes
Antenna Impedance	75 Ohm Unbalanced		Yes
AC Input Range	Input	～100V—240V 50Hz/60Hz	Yes
key FUNCTION	Standby,Source,Menu,Programme+/-,Volume +/-,		Yes
Facing viewing	LED Indicators & Remote Sensor		Standby(Red)/On(Green); Sensor is Reclusive

TERMINALS& Interface	TV RF Input	75 Ohm Unbalanced (IEC Type)		Yes
	Component Input	Component Image Input (3 RCA socket)		Yes
	SCART Interface	21 PIN Socket with full function (RGB In/Video In &Out/Audio In&Out		Yes
	PC(VGA) Input	PC Image Input (15Pin D-Sub)		Yes
		PC Audio Input (Φ3.5 Jack)		Yes
	HDMI Interface	HDMI Standard socket		Optional
	Head phone	Φ3.5 Jack		Yes
Audio	Output Power(Max)			5.0W×2
	Number of Speaker			2
	NICAM/A2 STEREO			Yes
	Tone (with base/Treble/Balance)			Yes
TFT-LCD Panel	Typical Parameter (LTM190M2-L31)	Resolution: 1440(H)×900(V) pixels		Yes
		Pixel Pitch: 0.2835x 0.2835 mm		Yes
		Display Colors: 16.7M Colors		Yes
		Brightness:300 cd/ m2		Yes
		Wide Viewing Angle		Yes
		Backlight:4CCFL Lamps		Yes
Main Electrical Specification For TV Section	Video sensitivity at 30dB S/N	VHF: ≤48dB		Yes
		UHF: ≤51dB		Yes
	Synchronizing Sensitivity	≤35dB		Yes
	Color Sensitivity	≤38dB		Yes
	Teletext Sensitivity	≤50dB		Yes
	NICAM Threshold	45+/-2dB		Yes
	I.F. Rejection	≤30dB		Yes
	Selectivity	Adjacent sound carrier	≤35dB	Yes
		Below adjacent sound carrier	≤30dB	Yes
		UP adjacent picture carrier	≤40dB	Yes
	Image Rejection	VHF	≤51dB	Yes
		UHF	≤46dB	
	Audio Frequency Response	100Hz----12KHz (+/- 3dB refer to 1KHz)		Yes
	Sound to Noise Ratio	≥46dB		Yes
	White Chromaticity	TBA.(Specific upon client requirement)		Yes

Main Electrical Specification For DVB-T Section	Constallation	QPSK,16QAM,64QAM	Yes
	Transmission Mode	2K,8K	Yes
	Code Rate	1/2, 2/3, 3/4, 5/6&7/8	Yes
	Suitable Signal Level	From -10dBm to -70dBm	Yes
	Trasport stream	MPEG-2 ISO/IEC 13818	Yes
	Input Rate	Max. 15Mbit/s	Yes
	RF Bandwidth	7 or 8MHz	Yes
	Active Resolution	720x480(NTSC);720x576(PAL)	Yes
	Video Format	PAL or NTSC CVBS/S-Video 16:9 & 4:3	Yes
	Audio format	MPEG Layer Ⅰ，Ⅱ 32、44。1、48KHz	Yes
Power Consumption	On working		60(Max.)
	Standby		≤1W
TELETEXT	1000 Pages for Western & Eastern Europe		Yes
Operating Temperature Range			5℃ To 35℃
Dimension(mm)			TBA
Net Weight/Gross Weigh			TBA
Packing			TBA
Accessories			User Manual, Remote Control, Power Adapter,
Regulations	Safety		CE LVD or Others Standards Upon Customer Requirement
	EMI		CE EMC or Others Standards Upon Customer Requirement
Specifications are subject to change without notice.			

IC’S GENERAL DESCRIPTION

MSD106CL design description

Figure 1 is pin configuration of MSD106CL.

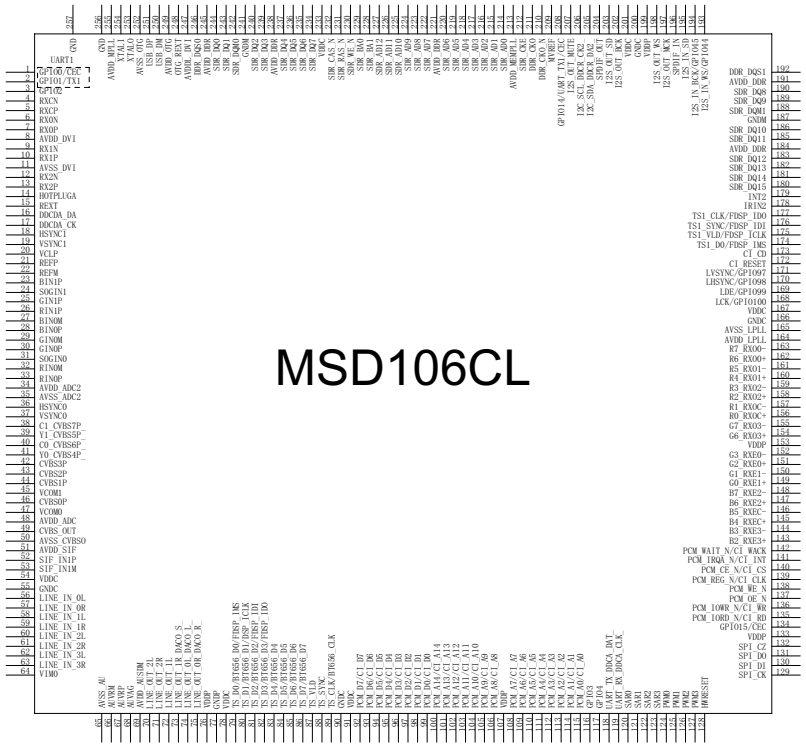

Figure 1

Pin Description

PIN DESCRIPTION		
Analog Interface		
Pin Name	Function	Pin
VCLAMP	CVBS/YC Mode Clamp Voltage Bypass	20
REFP	Internal ADC Top De-coupling Pin	21
REFM	Internal ADC Bottom De-coupling Pin	22
REXT	External Resister 390 ohm to AVDD_33	15
BIN1P	Analog Blue Input from Channel 1	23
SOGIN1	Sync-On-Green input from Channel 1	24
GIN1P	Analog Green Input from Channel 1	25
RIN1P	Analog Red Input from Channel 1	26
BINM	Reference Ground for Analog Blue Input	27
BIN0P	Analog Blue Input from Channel 0	28
GINM	Reference Ground for Analog Green Input	29
GIN0P	Analog Green Input from Channel 0	30
SOGIN0	Sync-On-Green Input from Channel 0	31
RINM	Reference Ground for Analog Red Input	32
RIN0P	Analog Red Input from Channel 0	33
HSYNC1	HSYNC/Composite Sync for VGA Input from channel 1	18
VSYNC1	VSYNC for VGA Input from channel 1	19
HSYNC0	HSYNC/Composite Sync for VGA Input from channel 0	36
VSYNC0	VSYNC for VGA Input from channel 0	37
Analog Video Input/Output Interface		
Pin Name	Function	Pin
VCOM1	CVBS Video Input Reference Ground	45
VCOM0	CVBS Video Input Reference Ground	47
CVBS7	CVBS (Composite) Video Input Channel 7	38
CVBS5	CVBS (Composite) Video Input Channel 5	39
CVBS6	CVBS (Composite) Video Input Channel 6	40
CVBS4	CVBS (Composite) Video Input Channel 4	41
CVBS3	CVBS (Composite) Video Input Channel 3	42
CVBS2	CVBS (Composite) Video Input Channel 2	43
CVBS1	CVBS (Composite) Video Input Channel 1	44
CVBS0	CVBS (Composite) Video Input Channel 0	46
CVBSOUT	CVBS (Composite) Video Output	49
Analog Audio Input/Output Interfa		
Pin Name	Function	Pin
SIF1P	SIF Audio Input Channel 1	52
SIF1M	Reference Ground for SIF Audio Input Channel 1	53
I2S_OUT_MCK	Audio Master Clock Output	197
I2S_OUT_BCK	Audio Bit Clock Output	202
I2S_OUT_WS	Word Select Output; 4mA driving strength	198
I2S_OUT_SD	Audio Serial Data Output; 4mA driving strength	203
I2S_OUT_MUTE/ CEC	Audio Output Mute Control / Consumer Electronics Control	207
SPDIF0	S/PDIF Audio Output; 4mA driving strength	204
I2S_IN_BCK	Audio Bit Clock Input	194
I2S_IN_WS	Word Select Input	193

I2S_IN_SD	Audio Serial Data Input	195
SPDIFI	S/PDIF Audio Input	196
AUVRM	Negative Reference Voltage for Audio ADC	66
AUVRP	Positive Reference Voltage for Audio ADC	67
AUVAG	Reference Voltage for Audio Common Mode	68
AUL0	Audio Line Input Left Channel 0	56
AUR0	Audio Line Input Right Channel 0	57
AUL1	Audio Line Input Left Channel 1	58
AUR1	Audio Line Input Right Channel 1	59
AUL2	Audio Line Input Left Channel 2	60
AUR2	Audio Line Input Right Channel 2	61
AUL3	Audio Line Input Left Channel 3	62
AUR3	Audio Line Input Right Channel 3	63
AUOUTL2	Main Audio Output Left Channel 2	70
AUOUTR2	Main Audio Output Right Channel 2	71
AUOUTL1	Main Audio Output Left Channel 1	72
AUOUTR1	Main Audio Output Right Channel 1	73
AUOUTL0	Main Audio Output Left Channel 0	74
AUOUTR0	Main Audio Output Right Channel 0	75
AUCOM	Reference Ground for Audio Line Input	64
Common Interface		
Pin Name	Function	Pin
PCMDATA[7:0]/ CI_DATA[7:0]	PCMCIA Data[7:0] / Common Interface Data[7:0]	92-99
PCMADR[14:0]/ CI_A[14:0]	PCMCIA Address[14:0] / Common Interface Address[14:0]	100-106, 108-115
PCMIOR/ CI_RD	PCMCIA Input/Output Read / Common Interface Read	135
PCMIOW/ CI_WR	PCMCIA Input/Output Write / Common Interface Write	136
PCMOEN	PCMCIA Output Enable	137
PCMWEN	PCMCIA Write Enable	138
PCMREG/ CI_CLK	PCMCIA Register / Common Interface Clock	139
PCMCEN/ CI_CS	PCMCIA Card Enable / Common Interface Chip Select	140
PCMIRQ/ CI_INT	PCMCIA Interrupt Request / Common Interface Interrupt	141
PCMWAIT/ CI_WACK	PCMCIA Extend Bus Wait Cycle / Common Interface Wait Acknowledge	142
CI_RST	Common Interface Reset	172
CI_CD	Common Interface Card Detect	173
TS Input Interface		
Pin Name	Function	Pin
TS0CLK	TS Clock	89
TS0DATA[7:0]	TS Data in Parallel; LSB (bit 0) is for serial TS data	86-79
TS0VALID	TS Data Valid	87
TS0SYNC	TS Sync-Byte Indicator	88
TS1CLK	2nd TS Clock	177

TS1DATA	2nd TS Data in Parallel	174
TS1VALID	2nd TS Data Valid	175
TS1SYNC	2nd TS Sync-Byte Indicator	176
DVI/HDMI Interface		
Pin Name	Function	Pin
RX0N	DVI/HDMI Channel 0 Negative Data Input	6
RX0P	DVI/HDMI Channel 0 Positive Data Input	7
RX1N	DVI/HDMI Channel 1 Negative Data Input	9
RX1P	DVI/HDMI Channel 1 Positive Data Input	10
RX2N	DVI/HDMI Channel 2 Negative Data Input	12
RX2P	DVI/HDMI Channel 2 Positive Data Input	13
RXCKN	DVI/HDMI Negative Clock Input	4
RXCKP	DVI/HDMI Positive Clock Input	5
LVDS Interface		
Pin Name	Function	Pin
LVA0M	LVDS A-Link Channel 0 Negative Data Output	152
LVA0P	LVDS A-Link Channel 0 Positive Data Output	151
LVA1M	LVDS A-Link Channel 1 Negative Data Output	150
LVA1P	LVDS A-Link Channel 1 Positive Data Output	149
LVA2M	LVDS A-Link Channel 2 Negative Data Output	148
LVA2P	LVDS A-Link Channel 2 Positive Data Output	147
LVACKM	LVDS A-Link Negative Clock Output	146
LVACKP	LVDS A-Link Positive Clock Output	145
LVA3M	LVDS A-Link Channel 3 Negative Data Output	144
LVA3P	LVDS A-Link Channel 3 Positive Data Output	143
LVB0M	LVDS B-Link Channel 0 Negative Data Output	163
LVB0P	LVDS B-Link Channel 0 Positive Data Output	162
LVB1M	LVDS B-Link Channel 1 Negative Data Output	161
LVB1P	LVDS B-Link Channel 1 Positive Data Output	160
LVB2M	LVDS B-Link Channel 2 Negative Data Output	159
LVB2P	LVDS B-Link Channel 2 Positive Data Output	158
LVBCKM	LVDS B-Link Negative Clock Output	157
LVBCKP	LVDS B-Link Positive Clock Output	156
LVB3M	LVDS B-Link Channel 3 Negative Data Output	155
LVB3P	LVDS B-Link Channel 3 Positive Data Output	154
Serial Flash Interface		
Pin Name	Function	Pin
SCK	SPI Flash Serial Clock	129
SDI	SPI Flash Serial Data Input	130
SDO	SPI Flash Serial Data Output	131
SCZ	SPI Flash Chip Select	132
IRIN	IR Receiver Input	178
INT	MCU Bus Interrupt; 4mA driving strength	179
GPIO Interface		
Pin Name	Function	Pin
GPIO125	General Purpose Input/Output; 4mA driving strength	14
GPIO100	General Purpose Input/Output; 4mA driving strength	168

GPIO99	General Purpose Input/Output; 4mA driving strength	169
GPIO98	General Purpose Input/Output; 4mA driving strength	170
GPIO97	General Purpose Input/Output; 4mA driving strength	171
GPIO15/CEC	General Purpose Input/Output; 4mA driving strength	134
GPIO14/ UART_TX1	General Purpose Input/Output; 4mA driving strength / Universal Asynchronous Transmitter	208
GPIO4	General Purpose Input/Output; 4mA driving strength	117
GPIO3	General Purpose Input/Output; 4mA driving strength	116
GPIO2	General Purpose Input/Output; 4mA driving strength	3
GPIO1/ UART_TX1	General Purpose Input/Output; 4mA driving strength / Universal Asynchronous Transmitter	2
GPIO0/ UART_RX1/ CEC	General Purpose Input/Output; 4mA driving strength / Universal Asynchronous Receiver / Consumer Electronics Control	1
PWM3	Pulse Width Modulation Output; 4mA driving strength	127
PWM2	Pulse Width Modulation Output; 4mA driving strength	126
PWM1	Pulse Width Modulation Output; 4mA driving strength	125
PWM0	Pulse Width Modulation Output; 4mA driving strength	124
SAR3	SAR Low Speed ADC Input 3; General Purpose Input/Output	123
SAR2	SAR Low Speed ADC Input 2; General Purpose Input/Output	122
SAR1	SAR Low Speed ADC Input 1; General Purpose Input/Output	121
SAR0	SAR Low Speed ADC Input 0;	120
	General Purpose Input/Output	
DRAM Interface		
Pin Name	Function	Pin
DQM[1:0]	Data Mask for Low Byte; active high	188, 242
DQS[1:0]	Data Strobe	192, 246
MVREF	Reference Voltage for DDR SDRAM Interface	209
MCLKZ	DRAM Memory Negative Differential Clock	210
MCLK	DRAM Memory Positive Differential Clock	211
MCLKE	DRAM Memory Clock Enable	212
BADR[1:0]	DRAM Memory Bank Address	228, 229
WEZ	Write Enable; active low	230
RASZ	Row Address Strobe; active low	231
CASZ	Column Address Strobe; active low	232
MDATA[15:0]	DRAM Memory Data Bus	180-183, 185, 186, 189, 190, 234-237, 239, 240, 243, 244
MADR[12:0]	DRAM Memory Address	227-222, 220-214
USB Interface		
Pin Name	Function	Pin

USB_REXT	USB External Resistor Pin; Connected through 910 ohm (±1%) Resistor to GND (Pin #252)	248
USB_DM	USB Inverting Data Input/Output	250
USB_DP	USB Non Inverting Data Input/Output	251
Misc Interface		
Pin Name	Function	Pin
DDCD_DA	HDCP Serial Bus Data/DDC Data of DVI/HDMI Port	16
DDCD_CK	HDCP Serial Bus Clock/DDC Clock of DVI/HDMI Port	17
DDCA_DA	DDC Data for Analog Port	118
DDCA_CK	DDC Clock for Analog Port	119
HWRESET	Hardware Reset; active high	128
DDCR_DA	DDC Data for ROM	205
DDCR_CK	DDC Clock for ROM	206
XIN	Crystal Oscillator Input	254
XOUT	Crystal Oscillator Output	253
Power Pins		
Pin Name	Function	Pin
AVDD_SIF	SIF Power	51
AVDD_AU	Audio Power	69
AVDD_DDR	DDR Power	184, 191, 221, 238, 245
AVDD_LPLL	LPLL Power	164
AVDD_MPLL	MPLL Power	255
AVDD_MEMPLL	PLL Power	213
AVDD_33	ADC Power	8, 34, 48
AVDDL_DVI	DVI Power	247
AVDD_USB	USB Power	249
VDDC	Digital Core Power	54, 78, 91, 167, 201, 233
VDDP	Digital Input/Output Power	76, 107, 133, 153, 199
GND	Ground	11, 35, 50, 55, 65, 77, 90, 165, 166, 187, 200, 241, 252, 256

WJCE6353 design description

Figure 2 is pin configuration of WJCE6353.

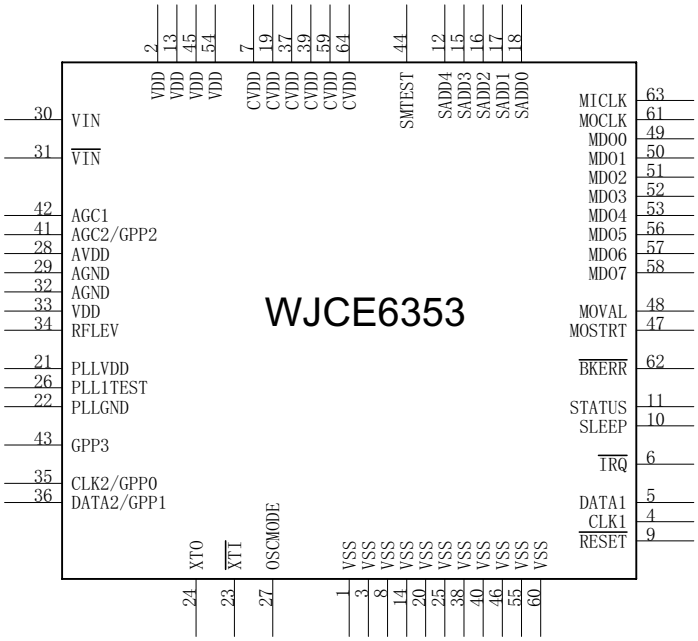

Figure 2

Pin Description

Pin Description		
Name	Function	Pin
MPEG pins		
MOSTRT	MPEG packet start	47
MOVAL	MPEG data valid	48
MDO(0:4)/MDO(5:7)	MPEG data bus	49-53, 56-58
MOCLK	MPEG clock out	61
BKERR	Block error	62
MICLK	MPEG clock in	63
STATUS	Status output	11
IRQ	Interrupt output	6
Control pins		
CLK1	Serial clock	4
DATA1	Serial data	5
XTI	Low phase noise oscillato	23
XTO		24
SLEEP	Device power down	10
SADD(4:0)	Serial address set	12, 15-18
SMTEST	Production test (only se	44
CLK2/GPP0	Serial clock tuner	35
DATA2/GPP1	Serial data tuner	36
AGC1	Primary AGC	42
AGC2/GPP2	Secondary AGC	41
GPP(3)	General purpose I/O	43
RESET	Device reset	9
OSCMODE	Crystal oscillator mode	27
PLLTEST	PLL analog test	26
VIN	positive input	30
VIN	negative input	31
RFLEV	RF level	34
Supply pins		
PLLVdd	PLL supply	21
PLLGnd		22
CVdd	Core logic power	7, 19, 37, 39, 59, 64
Vdd	I/O ring power	2, 13, 45, 54,
Vss	Core and I/O ground	1, 3, 8, 14, 20, 25, 38, 40, 46, 55, 60
AVdd	ADC analog supply	28
AGnd		29, 32
Vdd	2nd ADC supply	33

HYB25DC256163CE-4 design description

Figure 3 is pin configuration of HYB25DC256163CE-4.

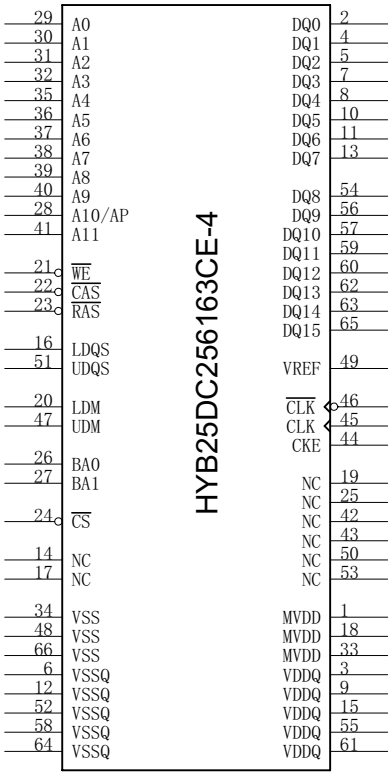

Figure 3

Pin Description

PIN DESCRIPTION		
Name	Function	Pin
Data Signals × 8 Organization		
DQ0	Data Signal 15:0	2
DQ1		5
DQ2		8
DQ3		11
DQ4		56
DQ5		59
DQ6		62
DQ7		65
Data Strobe × 8 Organization		
DQS	Data Strobe	51
Data Mask × 8 Organization		
DM	Data Mask	47
Data Signals ×16 Organization		
DQ0	Data Signal 15:0	2
DQ1		4
DQ2		5
DQ3		7
DQ4		8
DQ5		10
DQ6		11
DQ7		13
DQ8		54
DQ9		56
DQ10		57
DQ11		59
DQ12		60
DQ13		62
DQ14		63
DQ15		65
Data Signals × 16 Organization		
UDQS	Data Strobe Upper Byte	51
LDQS	Data Strobe Lower Byte	16
Data Mask ×16 Organization		
UDM	Data Mask Upper Byte	47
LDM	Data Mask Lower Byte	20
Power Supplies		
VREF	I/O Reference Voltage	49
VDDQ	I/O Driver Power Supply	3, 9, 15, 55, 61
VDD	Power Supply	1, 18, 33

SPECIAL IC INTRODUCTON

U2	MSD106CHL	Main IC (CPU/Decode/Scanner)
U14	WJCE6353	DTV demodulator
U9	HYB25DC256163CE-4	256Mbit DDR
U24	MX25L3205DM1/2I-12G	4Mbit Serial Flash Rom
U26	TDA9886TS	ATV demodulator
U6,U11	PI5V330QE	4-channel video switch
U32,U33	UTC4558	Dual operational amplifier
U12,U120,U43	M24C02	2Kbit serial IIC bus EEPROM
U8	TDA7266SA	Audio power amplifier
U20	MP2307	DC TO DC converter for 5V output
U4	AZ1117H-ADJTR	1.8V(Adjustable) VOLTAGE REGULATOR
U28	MP2259DT-LF-Z	DC TO DC converter for 1.2V output
U507	BL1084-CY	3.3V(Adjustable) VOLTAGE REGULATOR
U18	AZ1117H-ADJTR	5V(Adjustable) VOLTAGE REGULATOR

BLOCK DIAGRAM

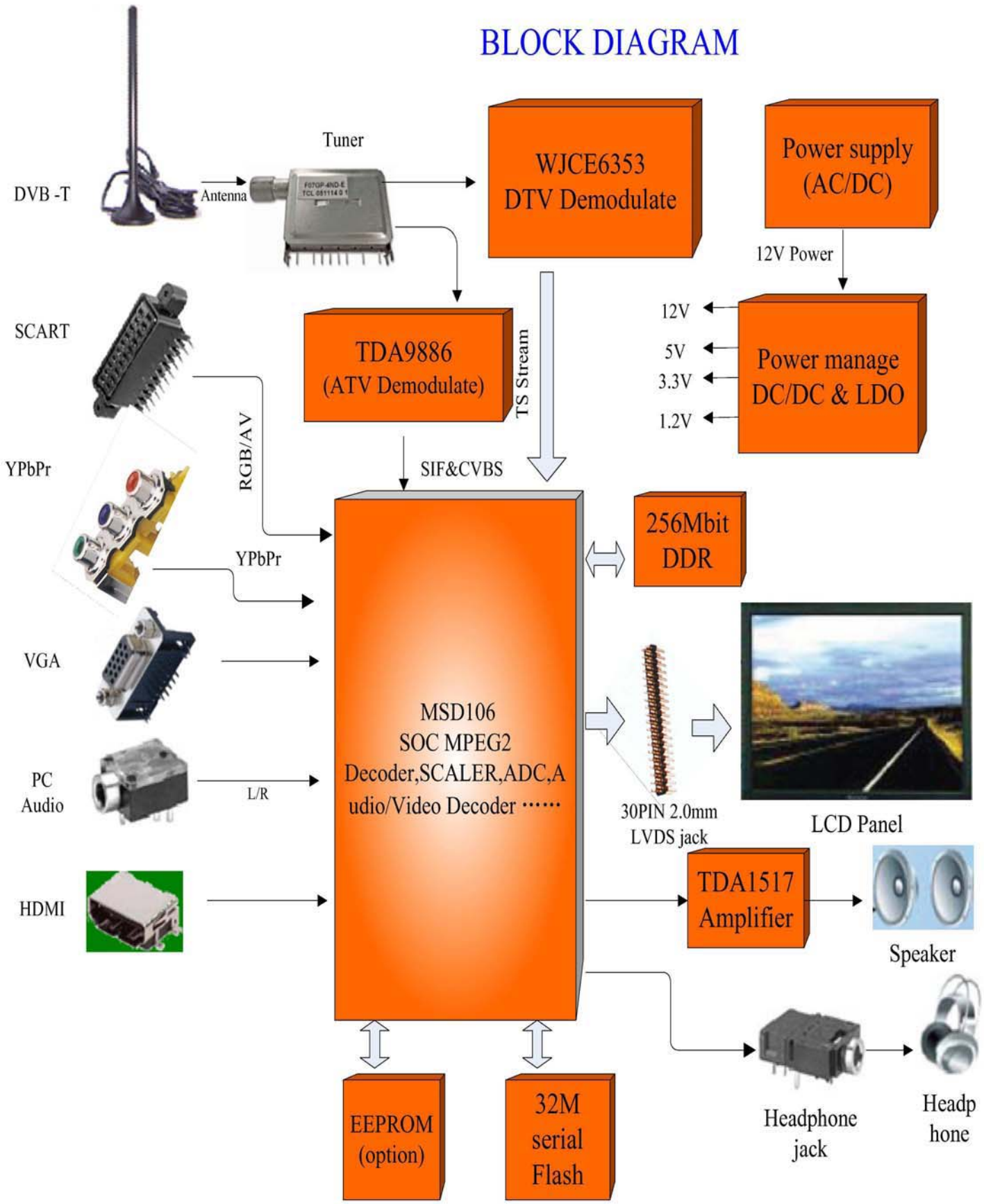

CIRCUIT DIAGRAM

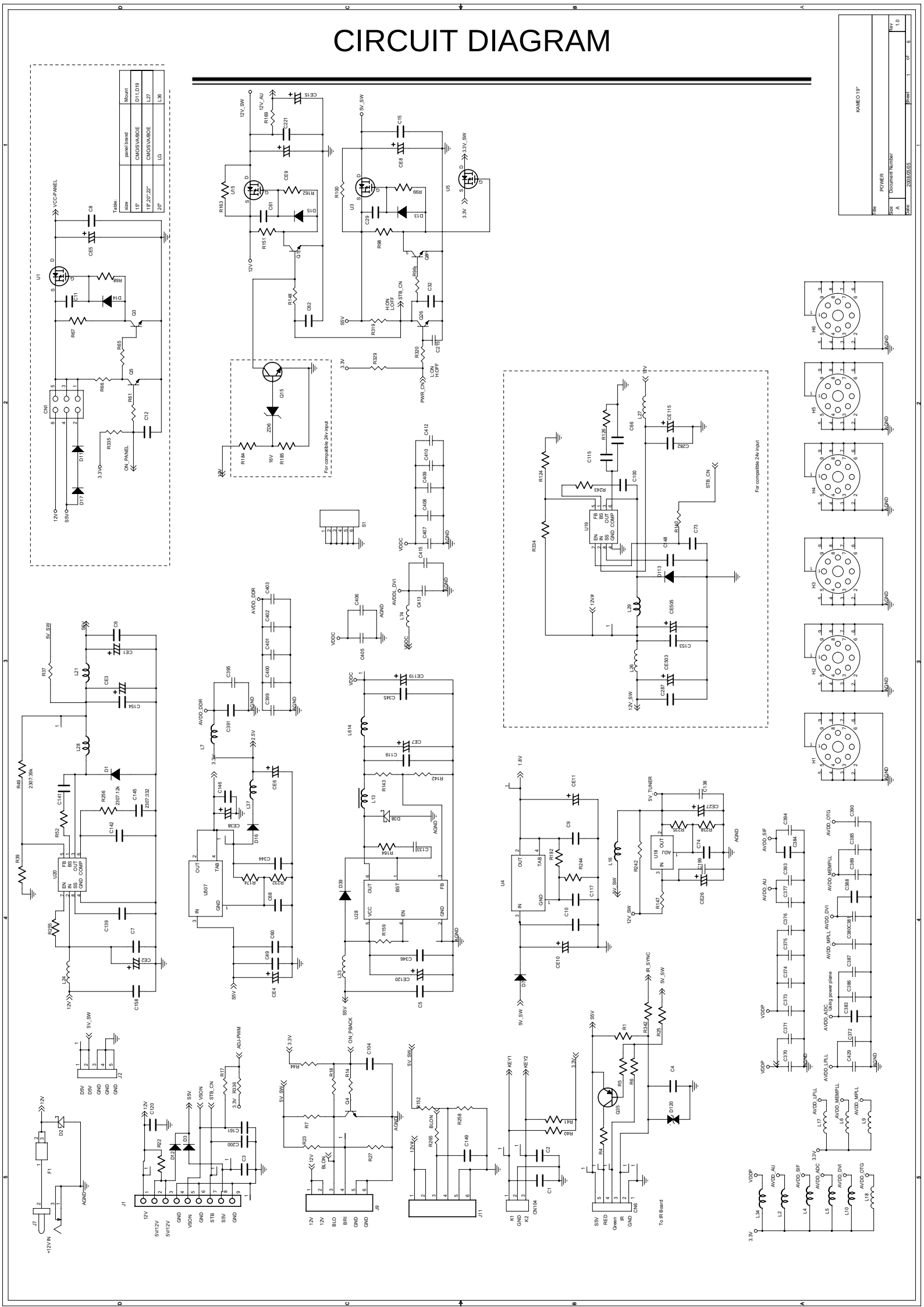

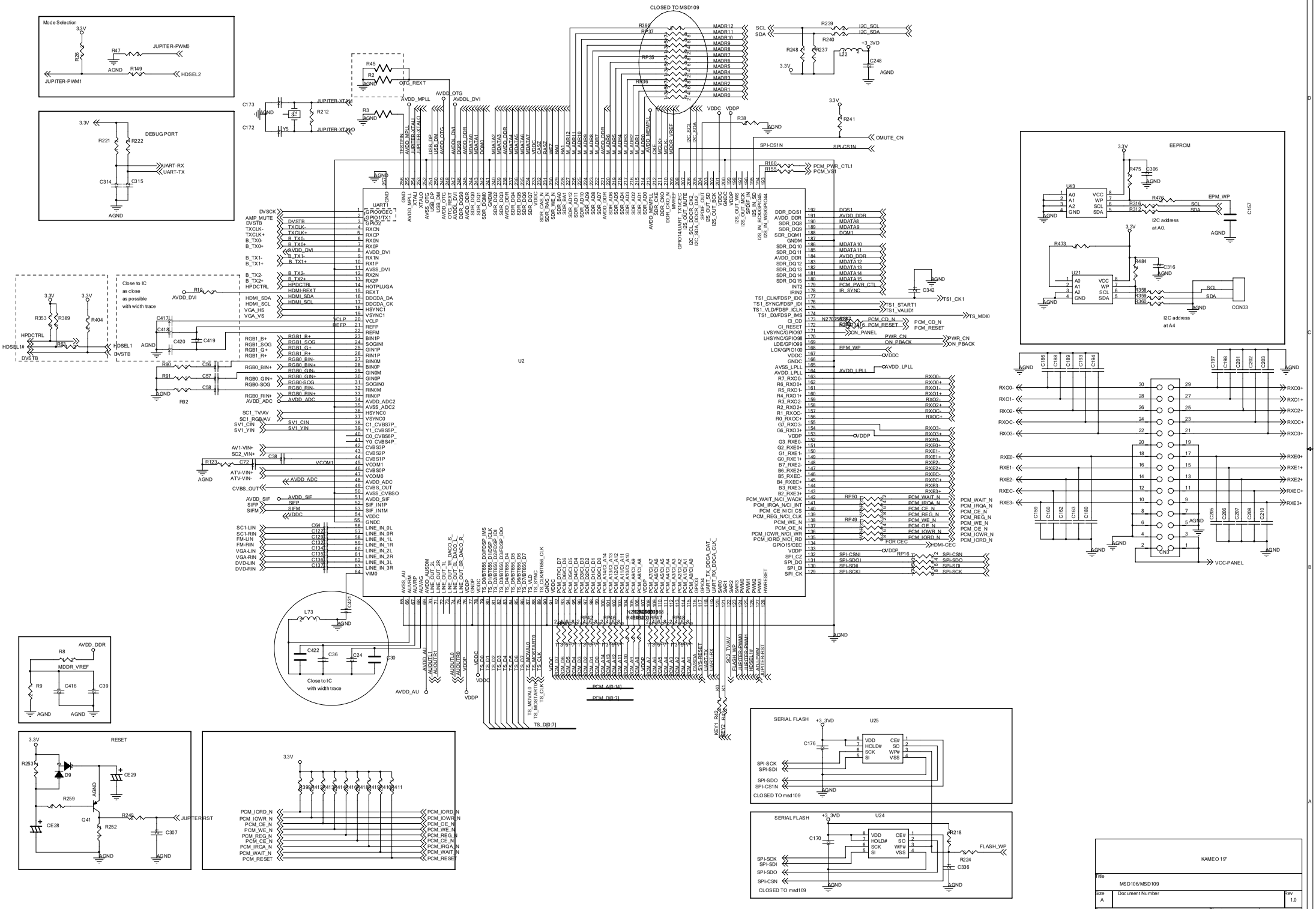
Mode Selection
DEBUG PORT
CLOSED TO MSD109
U2
EEPROM
SERIAL FLASH
U25
U24
RESET
KAMEO 19"
MSD106/MSD109
Document Number
Rev
1.0
Date:
2008/05/05
Sheet
1
of
6

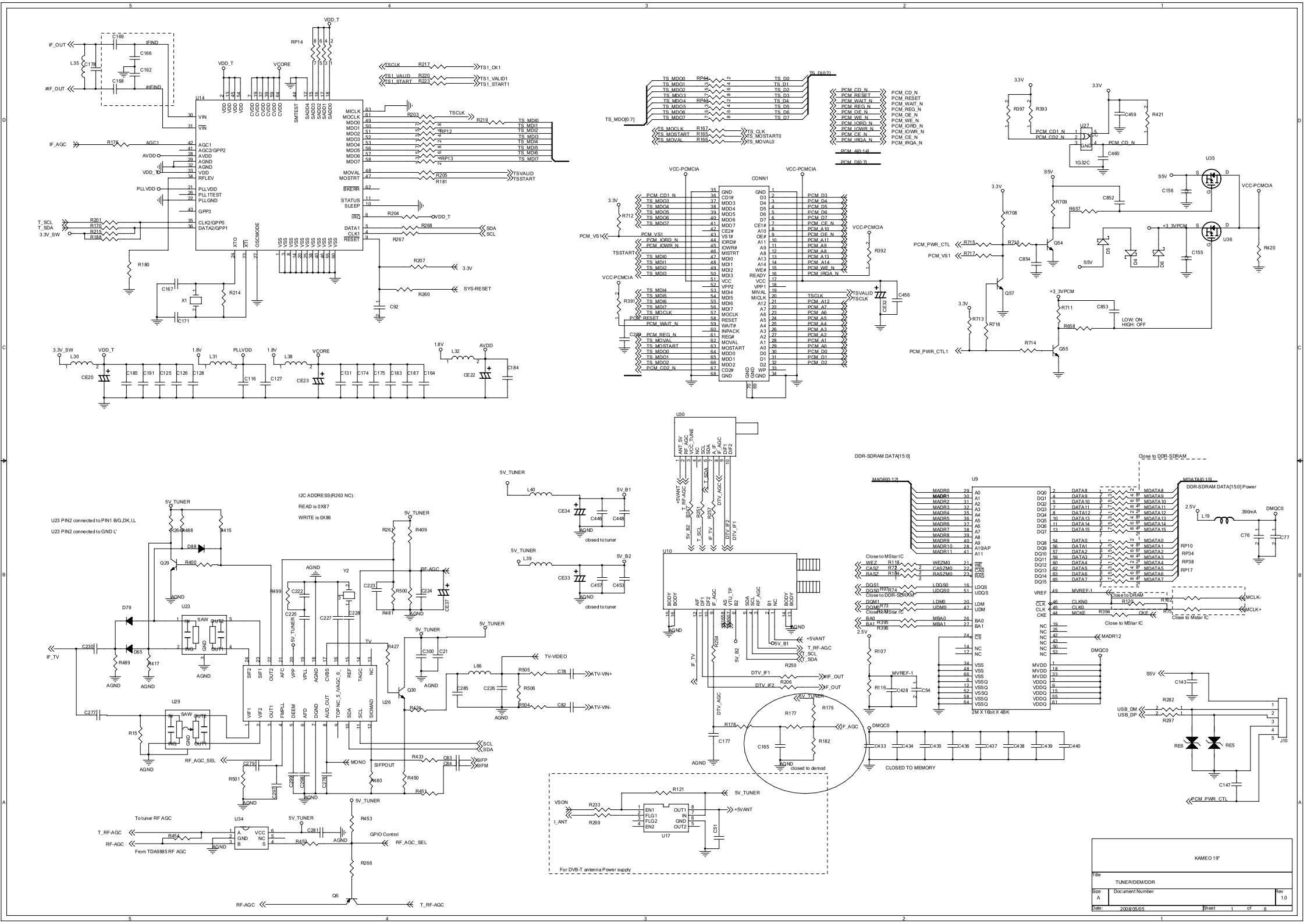
U14
U35
U36
U27
CONN1
U30
U9
U10
U23
U29
U34
U17
Q6
X1
J10
I2C ADDRESS(R263 NC):
READ is 0X87
WRITE is 0X86
U23 PIN2 connected to PIN1 B/G,DK,I,L
U23 PIN2 connected to GND L'
DDR-SDRAM DATA[15:0]
DDR-SDRAM DATA[15:0] Power
Close to DDR-SDRAM
Close to MStar IC
Close to DRAM
closed to tuner
closed to demod
CLOSED TO MEMORY
To tuner RF AGC
From TDA9885 RF AGC
GPIO Control
For DVB-T antenna Power supply
LOW: ON
HIGH: OFF
KAMEO 19"
TUNER/DEM/DDR
Document Number
Rev 1.0
Date: 2008/05/05
Sheet 1 of 6

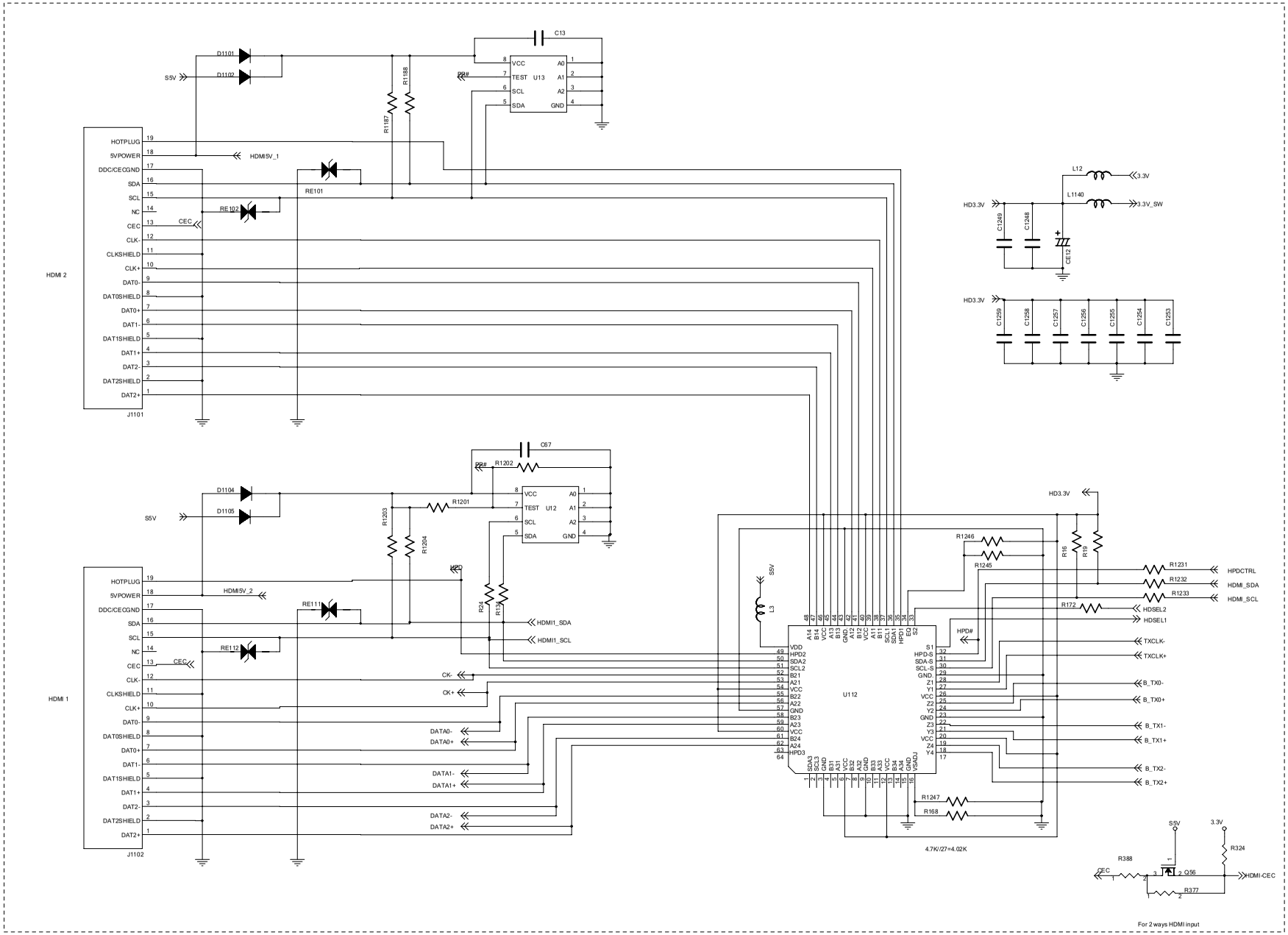

KAMEO 19"			
Title	HDMI INPUT		
Size A	Document Number		Rev 1.0
Date: 2008/05/05	Sheet 1 of 6		

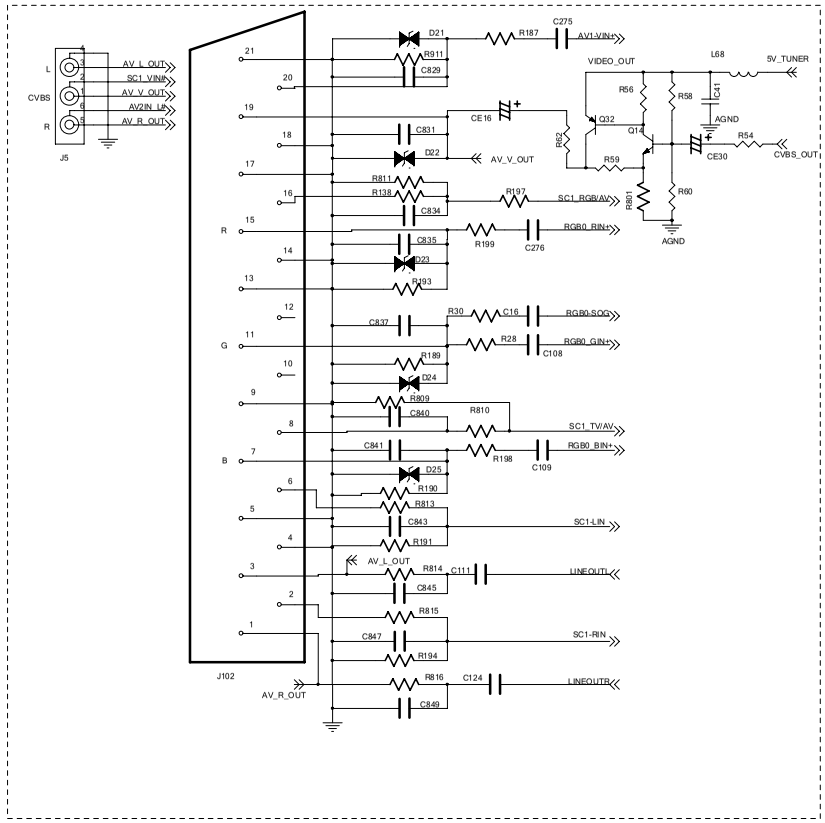

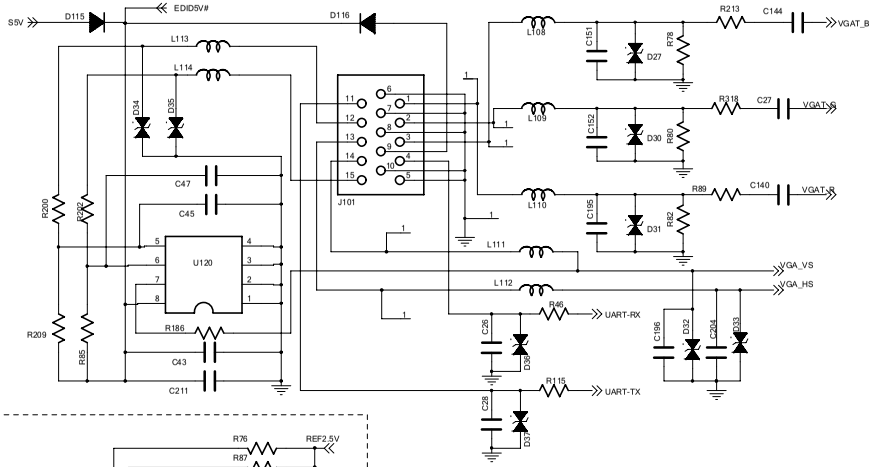

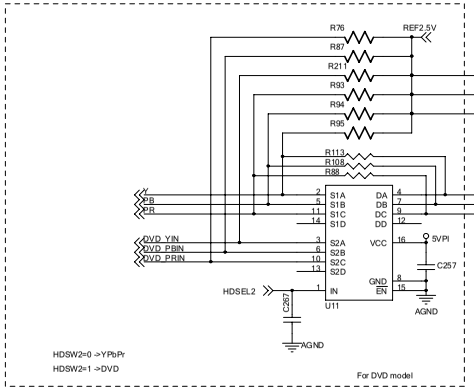

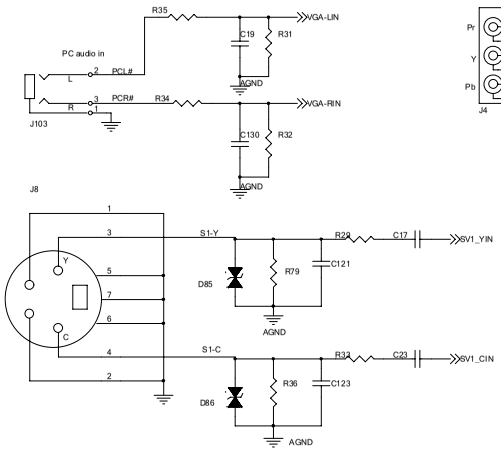

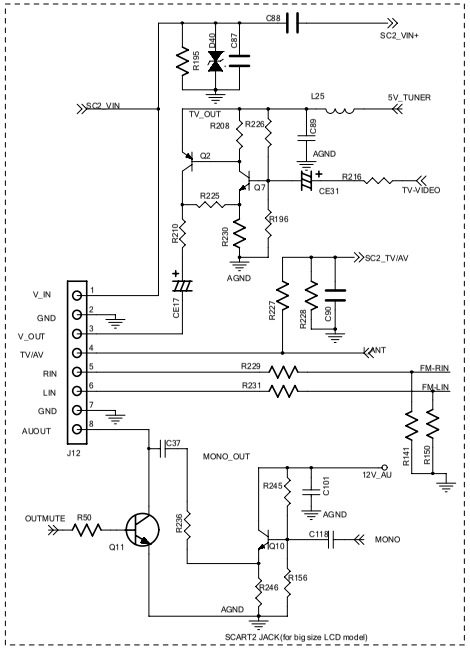

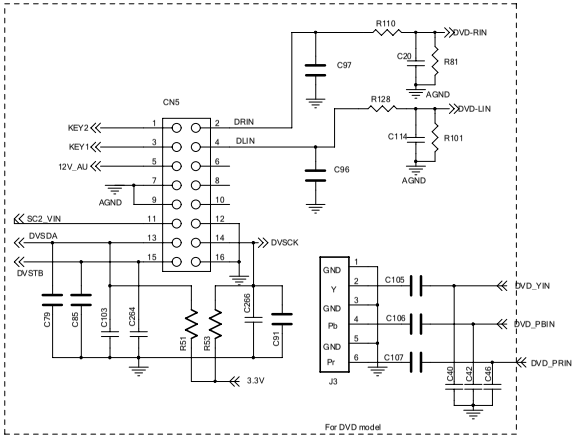

KAMEO 19"

Title	TERMINAL		
Size A	Document Number		Rev 1.0
Date: 2008/05/05	Sheet 1 of 6		

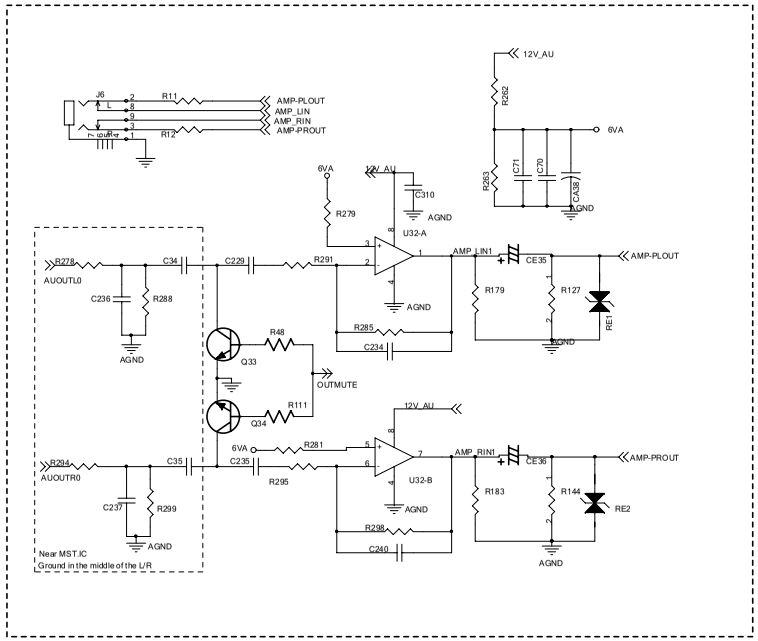

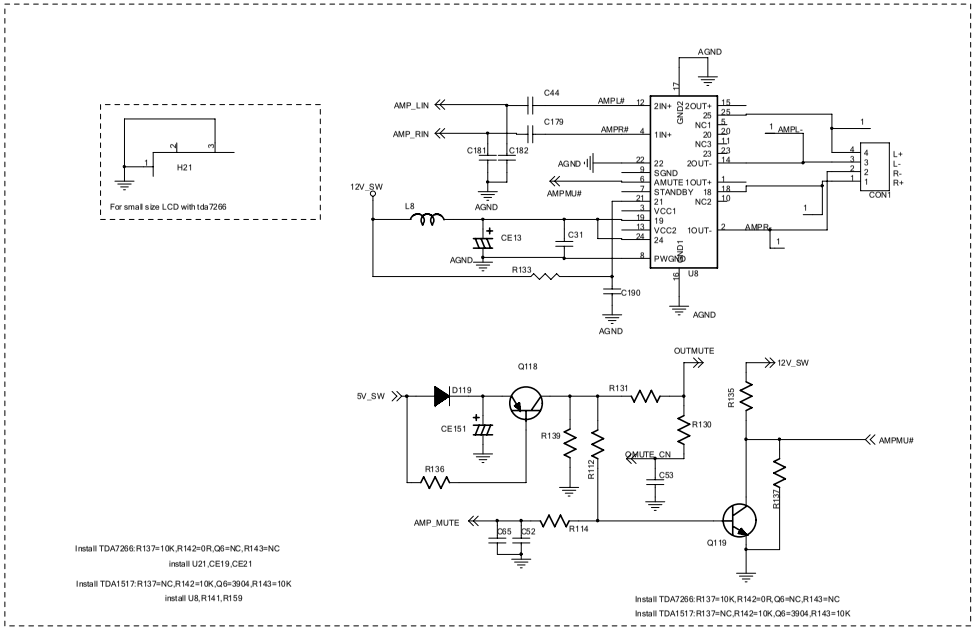

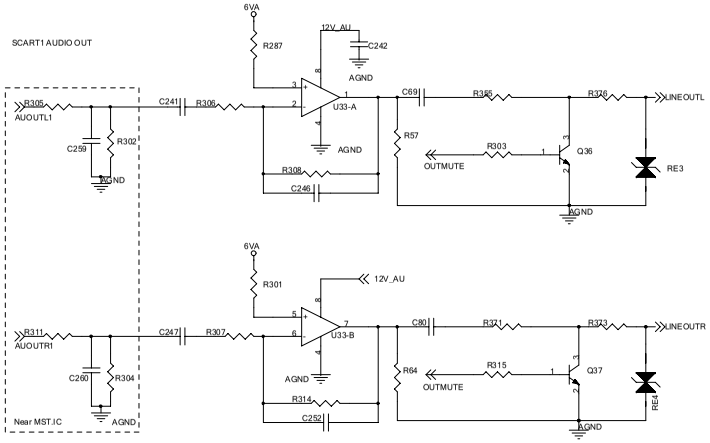

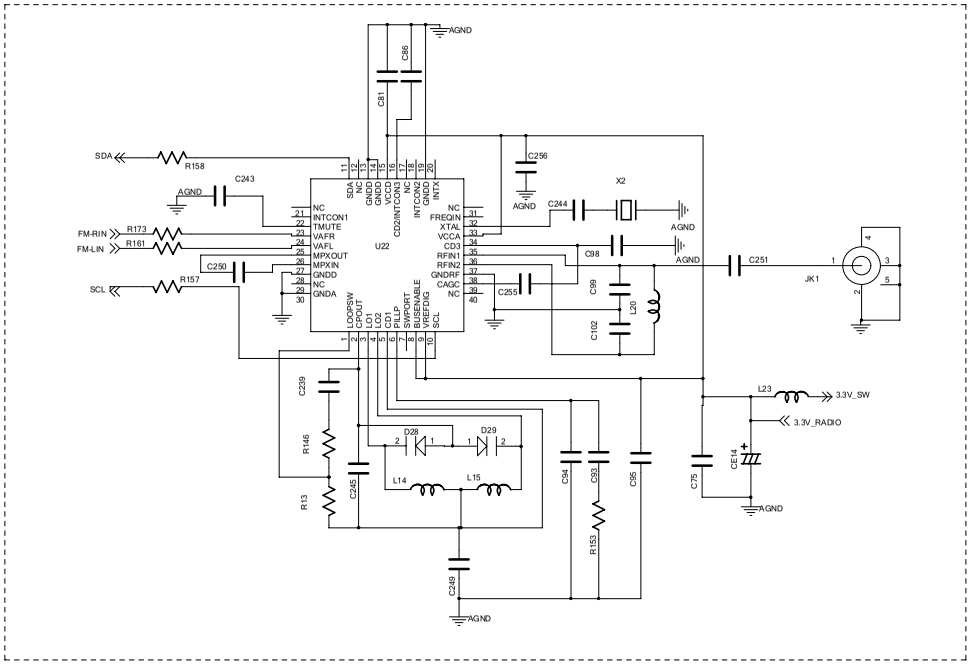

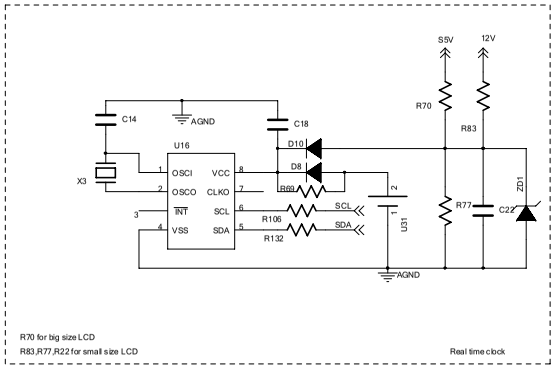

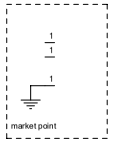

KAMEO 19"

Title	AUDIO/FM RADIO	
Size A	Document Number	Rev 1.0
Date: 2008/05/05	Sheet 1 of 6	

FACTORY MODE&ADJUSTMENT

Press [GREEN] button on the remote control to appear an OSD MENU and then press [OK] button for about 5 seconds. The Factory setting menu will appear on screen. You can exit setting by pressing [EXIT] button.

The Factory menu is as below picture:

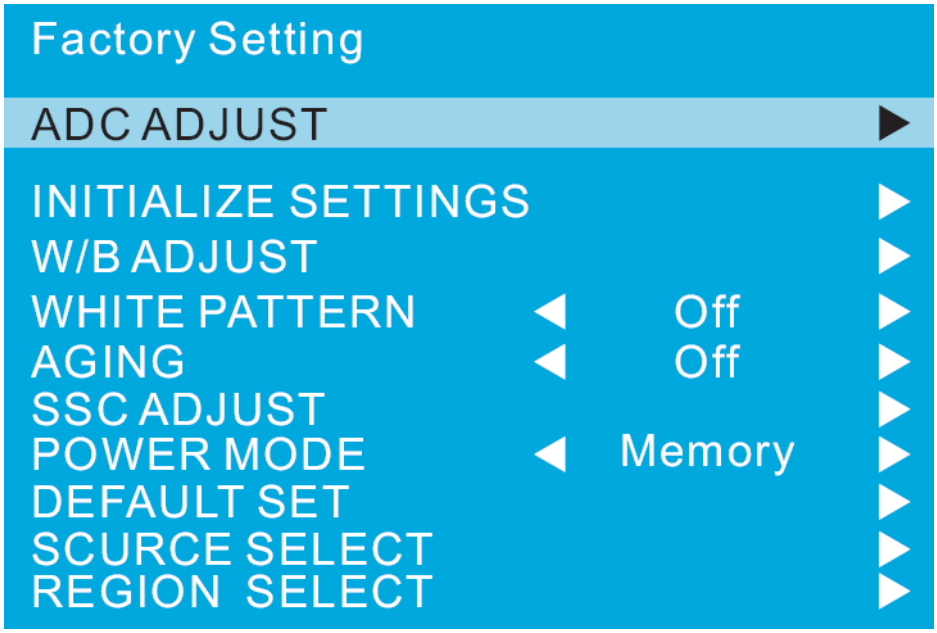

Let’ s comprehend every item function.

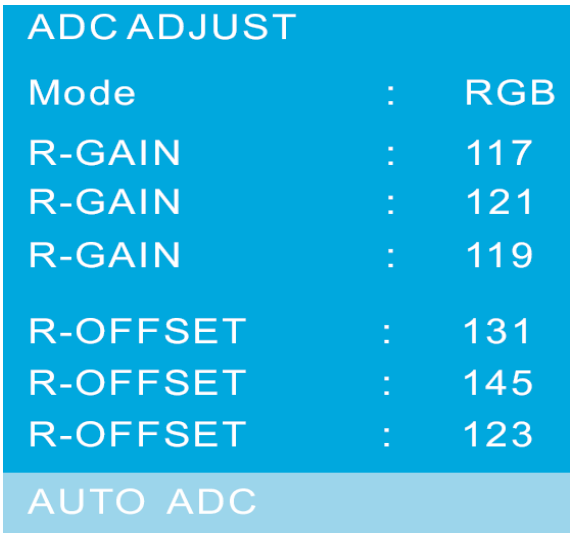

Options		
Item	Value	Description
ADC ADJUEST		

Mode	RGB	Picture White balance adjustment
R-GAIN	117	
G-GAIN	121	
B-GAIN	119	
R-OFFSET	131	
G-OFFSET	145	
B-OFFSET	123	
AUTO ADC	Start	Press [OK] button to confirm your choice and the image will adjust itself until success.

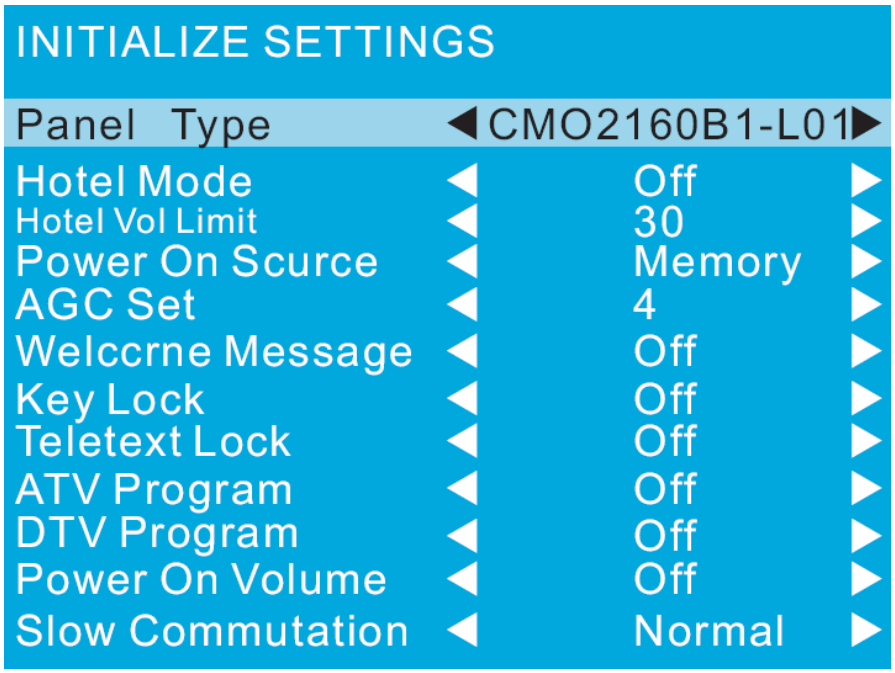

Options		
Item	Value	Description
INITIALIZE SETTINGS		
Panel Type	LC420WXN-SAA1	To select different Panel Type by pressing[◀/▶] button.
Hotel Mode	Off	To select Hotel Mode ON/OFF
Hotel Vol Limit	30	To setup max volume on Hotel Mode
Power on source	Memory	To select Power on source mode
AGC Set	4	To setup AGC value
Welcome Message	Off	To select Welcome Message ON/OFF
key lock	Off	To select key lock ON/OFF
Teletext lock	Off	To select Teletext lock ON/OFF

ATV Program	Off	To select ATV program number or OFF
DTV Program	Off	To select DTV program number or OFF
Power on volume	Off	To setup volume value when TV power on
Slow commutation	Normal	To select Slow commutation mode

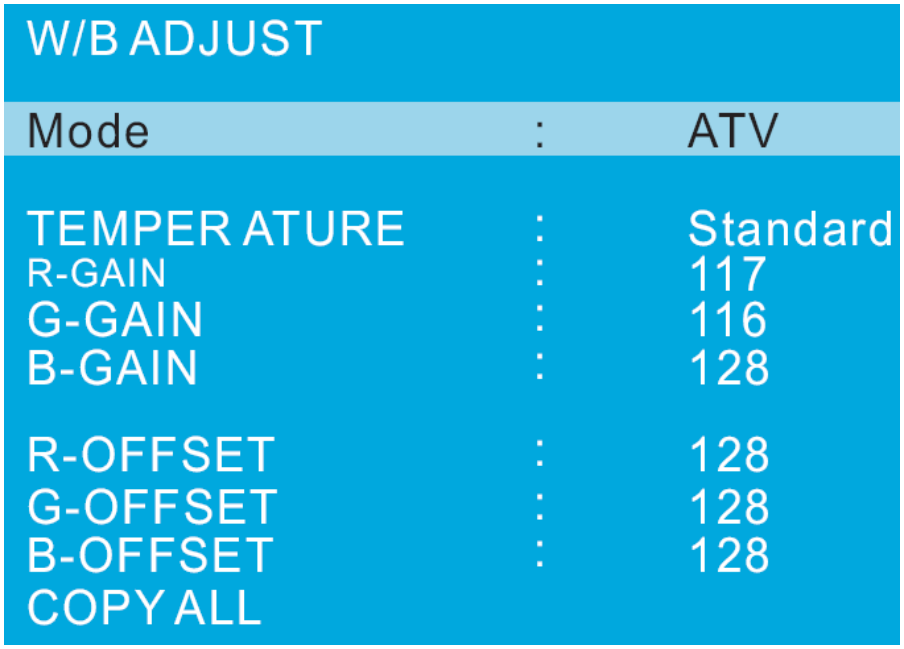

Options		
Item	Value	Description
W/B ADJUST		
Mode	AV	To select every source
TEMPERATURE	Standard	To select color temperature′ s mode
R-GAIN	120	Picture color temperature adjustment
G-GAIN	117	
B-GAIN	122	
R-OFFSET	128	
G-OFFSET	128	
B-OFFSET	128	
COPY ALL		To copy current value for other source
WHITE PATTERN	Off	To select WHITE PATTERN on/off
AGING	Off	To select AGING on/off

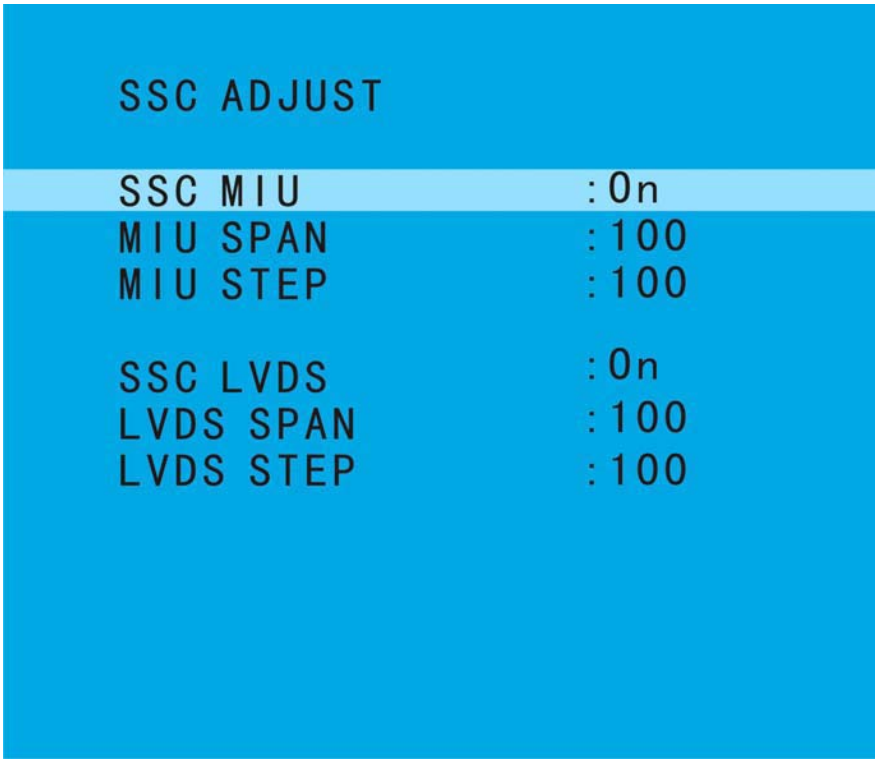

Options		
Item	Value	Description
SSC ADJUST		
SSU MIU	On	To select SSU MIU on/off
MIU SPAN	200	To setup MIU SPAN value
MIU STEP	200	To setup MIU STEP value
SSC LVDS	On	To select SSU LVDS on/off
LVDS SPAN	200	To setup LVDS SPAN value
LVDS STEP	200	To setup LVDS STEP value
POWER MODE	Memory	To select power mode: Memory,Standby,ForceOn

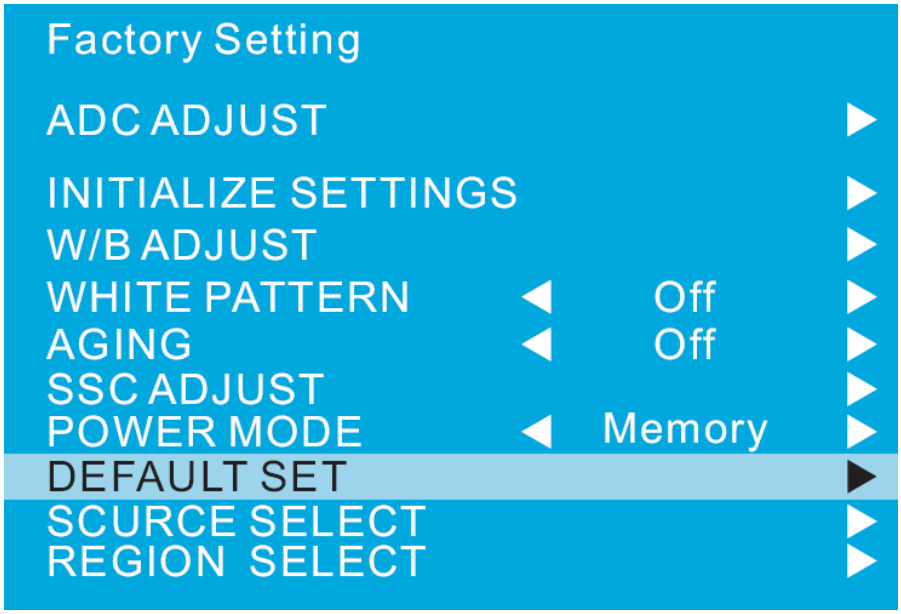

	Options	
Item	Value	Description
DEFAULT SET	To initialize NVM from ROM when selecting this option and pressing [OK] button to control	

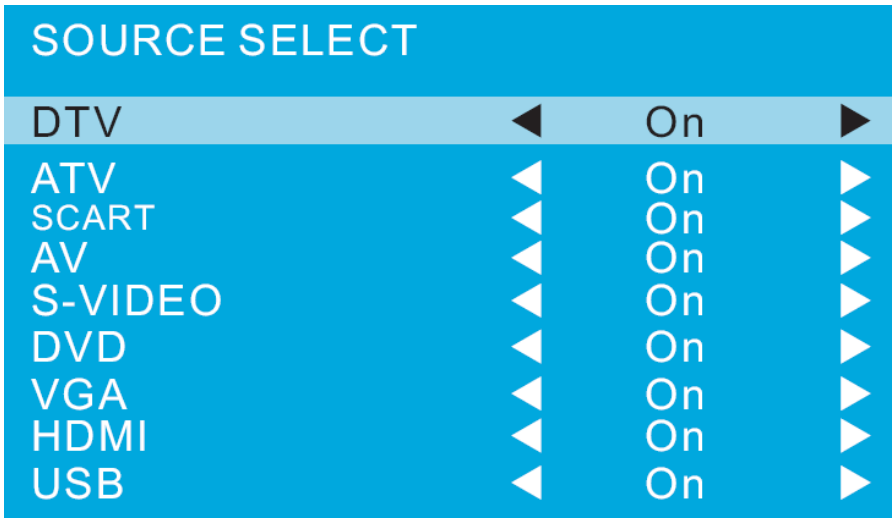

	Options	
Item	Value	Description
SOURCE SELECT		
DTV	On	To select DTV source on/off
ATV	On	To select ATV source on/off
SCART1	On	To select SCART1 source on/off
SCART2	On	To select SCART2 source on/off

AV	On	To select AV source on/off
S-VIDEO	On	To select S-VIDEO source on/off
COMPONENT	On	To select COMPONENT source on/off
DVD	On	To select DVD source on/off
VGA	On	To select VGA source on/off
HDMI1	On	To select HDMI1 source on/off
HDMI2	On	To select HDMI2 source on/off

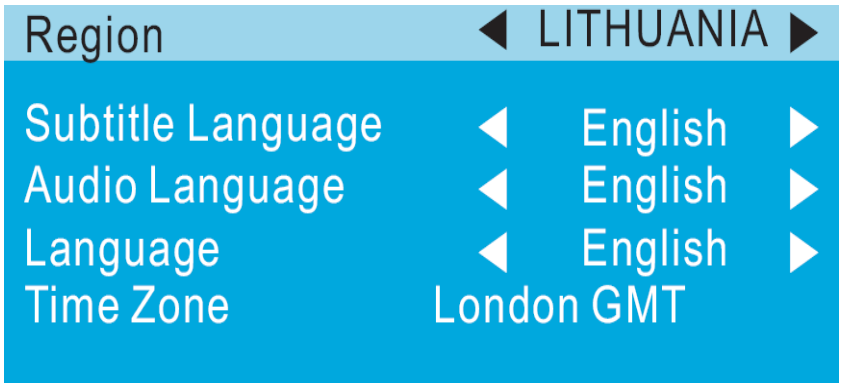

Options		
Item	Value	Description
REGION SELECT		
Region	UK	To select different Region
Subtitle Language	English	To select different Subtitle language
Audio Language	English	To select different Audio language
Language	English	To select different Language
Time Zone	London GMT	To select different Time zone

TROUBLE SHOOTING

Please check for causes of problems in accordance with the following chart before contacting any maintenance personnel.

DISPLAY TROUBLESHOOTING

Symptom	Causes and Correction
Black screen, power indicator light off	◆ Check whether power cord is well connected, and whether this unit is power on
	◆ Check whether the signal cord of input device is well connected ◆ Check whether input device is power on
Image display flicker, unstable	◆ Check whether the input device signal is in this unit's specification
	◆ Check computer output mode: control panel-display-setup ◆ If the setup does not accord with this unit's specification, please change the display setup
	◆ Hor scanning frequency: 30kHz ~75kHz ◆ Ver scanning frequency: 50 Hz~75Hz ◆ Max display mode: 15":1024X768@75 Hz

SOUND AND TV TROUBLESHOOTING

Symptom	Causes and Correction
	Make sure there is nothing plugged in the headphone jack
Cannot power on	◆ Please make sure the well connecting of power cord
No sound	◆ Please make sure the well connecting of audio cord
	◆ Check volume
	◆
Volume too low	◆ Check volume
	◆ If volume is still too low when adjusting volume to maximum, please check whether the input device is well set
Snowy picture	◆ Input antenna damaged or not well connected
Remote control failure	◆ Check whether remote control battery used up ◆ Whether battery installation is correct ◆ Whether obstacles exists between remote control and the unit's receiving window ◆ Check whether receiving window has strong light

EXPLODED VIEW

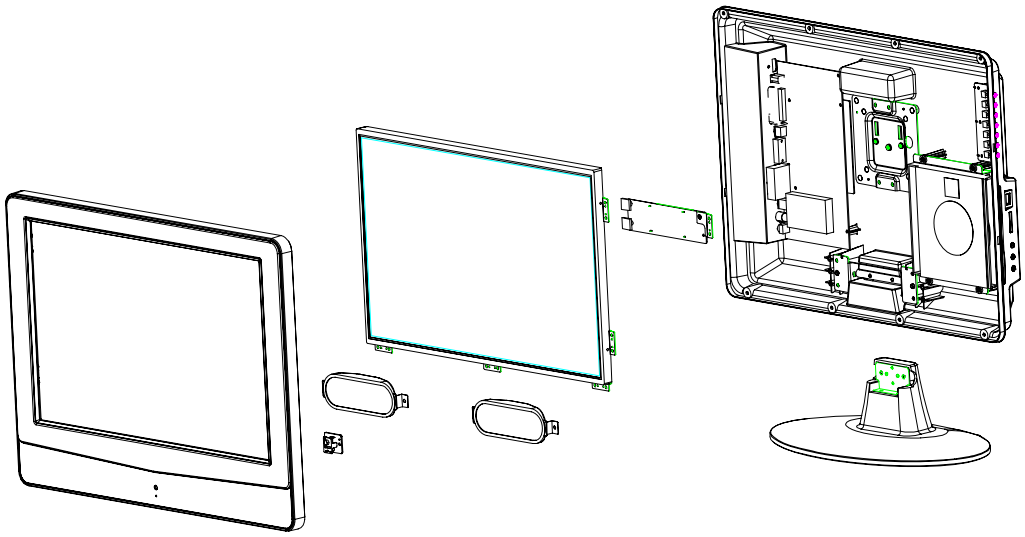

Upgrade Software

Tips: this software tool is used to upgrade the relevant model of MSD106 or MSD109 solution, so it is unnecessary to install. Open this software and then you may operate as follows:

Operation steps:

1. First connect the upgrade tool: the parellel line connect the PC parallel port,theVGA line connect the TV. The upgrade step as follows.

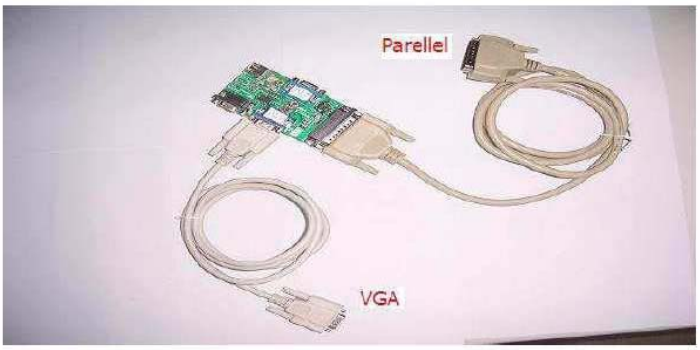

2. After opening Mstar ISP Utility V4.4.2.2 software, the following interface appears:
Seen from this picture.

3. If it is the first time for you to use this software tool, please click the “Config” button, confirm whether the default configuration is correct. If not, please setup this configuration parameter.

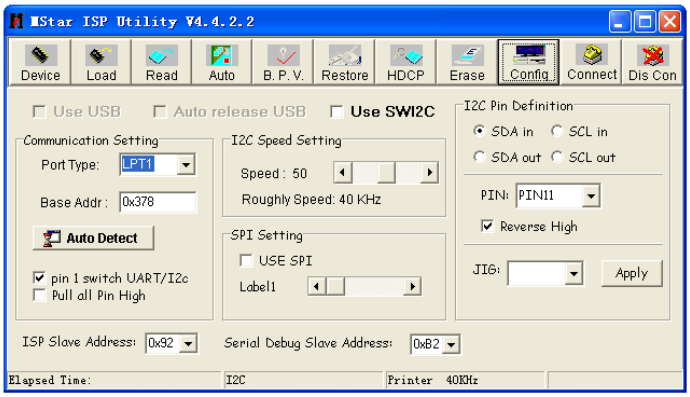

4. Please click the “Connect” button to connect device.

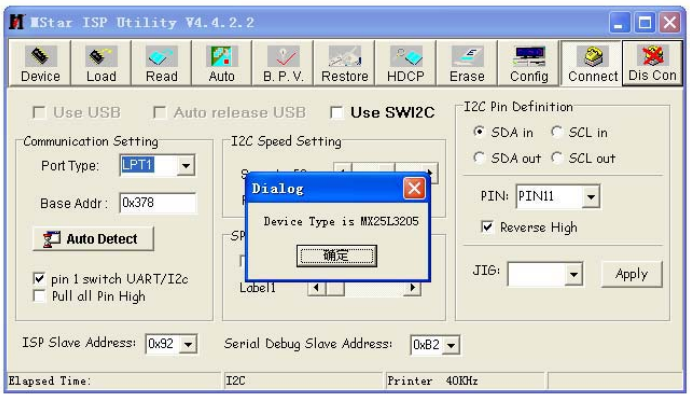

5. After connecting device, click “Read” button to read the files that need to upgrade.

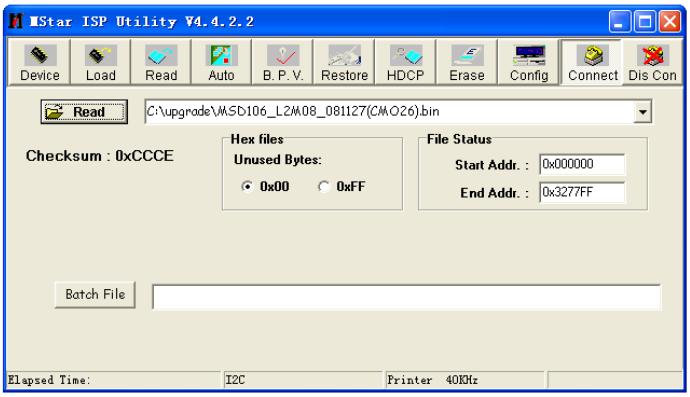

6. After reading files, click “Auto” button and confirm the parameter is correct, if Ok, please click “Run” button to upgrade the software.

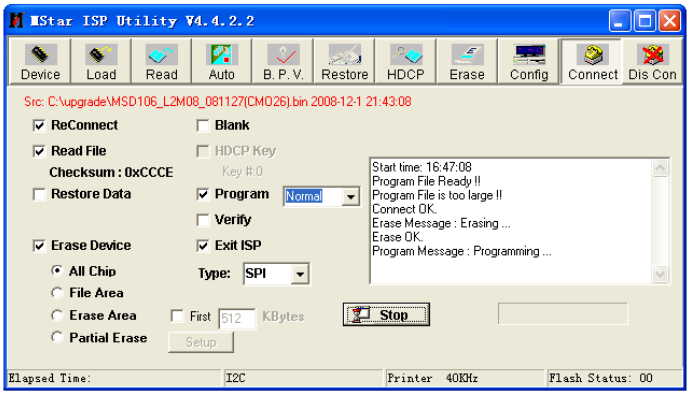

7. If the software update is not Ok, please click the “Run” button and upgrade the software again.

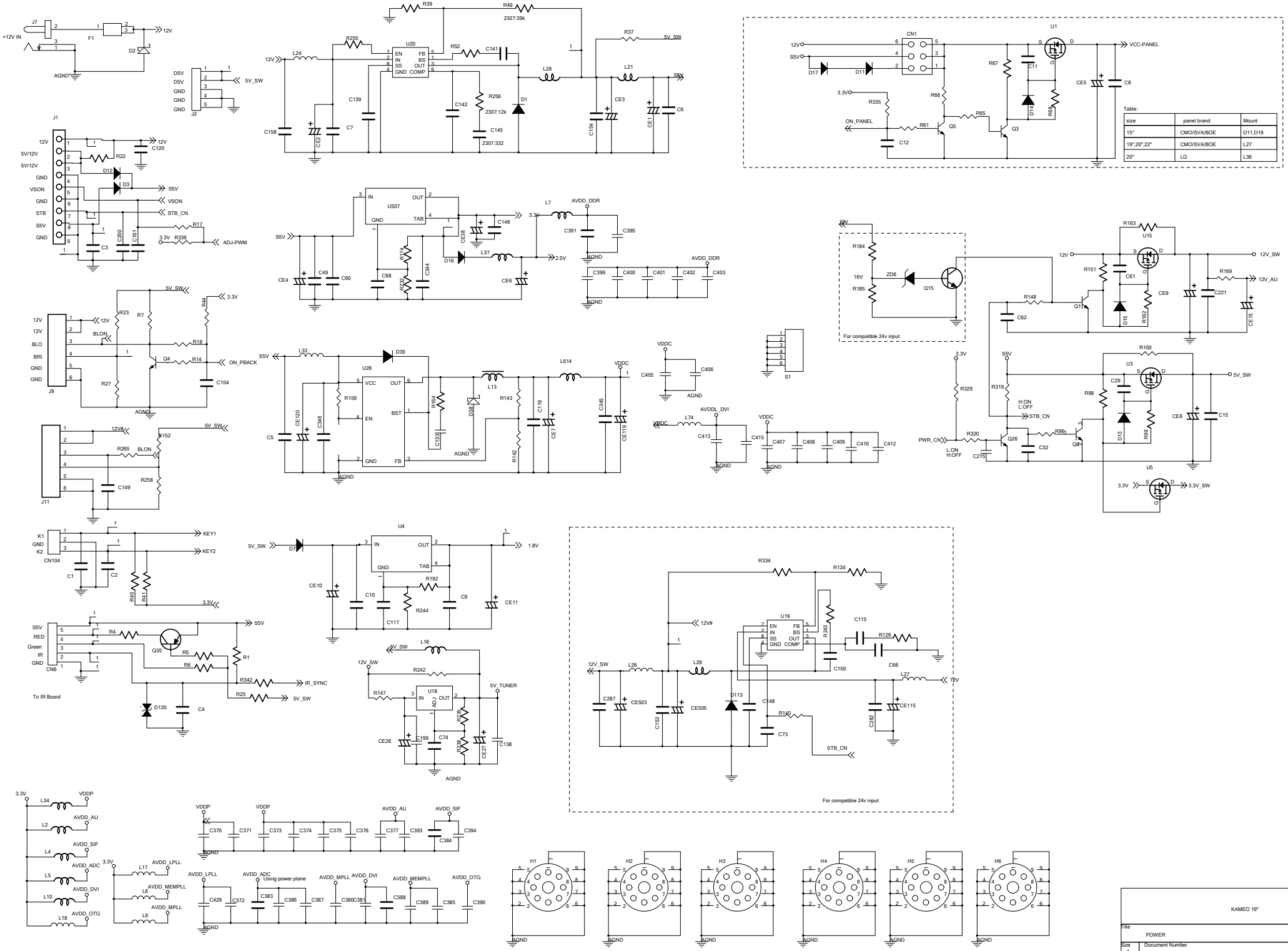
+12V IN
J7
F1
D2
12V
AGND
J2
5V_SW
U20
EN
IN
SS
GND
FB
BS
OUT
COMP
R39
R49
2307:39k
R255
R52
C141
R37
5V_SW
L24
L28
L21
S5V
C139
C142
R256
2307:12k
D1
C145
2307:332
C158
C7
C154
CE3
CE1
C6
J1
12V
5V/12V
5V/12V
GND
VSON
GND
STB
S5V
GND
R22
C120
D12
D3
S5V
VSON
STB_CN
R17
3.3V
R336
ADJ-PWM
C3
C200
C161
U507
IN
OUT
GND
TAB
C146
L7
AVDD_DDR
3.3V
C391
C395
AGND
S5V
CE18
D16
L37
2.5V
CE4
C49
C60
C68
R74
R72
C344
CE6
C399
C400
C401
C402
C403
AVDD_DDR
J9
12V
12V
BLO
BRI
GND
GND
R23
R7
R44
3.3V
BLON
R18
Q4
R14
ON_PBACK
R27
C104
AGND
U28
VCC
OUT
EN
BST
GND
FB
L33
D39
R159
R164
D38
L13
R143
L614
VDDC
C5
CE120
C346
C133
R142
C119
CE7
C345
CE119
AGND
VDDC
C405
C406
AGND
VDDL_DVI
L74
C413
C415
C407
C408
C409
C410
C412
AGND
S1
J11
12V
5V_SW
R152
R265
BLON
C149
R258
K1
GND
K2
CN104
KEY1
KEY2
C1
C2
R40
R41
3.3V
U4
IN
OUT
GND
TAB
5V_SW
D7
1.8V
CE10
C10
R192
R244
C9
CE11
C117
S5V
RED
Green
IR
GND
CN6
R4
Q35
R5
R6
R1
R342
IR_SYNC
R25
5V_SW
To IR Board
D120
C4
9V_SW
L16
12V_SW
R242
U18
IN
ADJ
OUT
5V_TUNER
R147
R236
R238
CE26
C199
C74
CE27
C138
AGND
3.3V
L34
VDDP
L2
AVDD_AU
L4
AVDD_SIF
L5
AVDD_ADC
L10
AVDD_DVI
L18
AVDD_OTG
3.3V
L17
AVDD_LPLL
L8
AVDD_MEMPLL
L9
AVDD_MPLL
VDDP
C370
C371
C373
C374
C375
C376
AVDD_AU
C377
C393
AVDD_SIF
C394
C384
AGND
AVDD_LPLL
C429
C372
AVDD_ADC
Using power plane
C383
C386
C387
AVDD_MPLL
C380
C381
AVDD_DVI
C388
AVDD_MEMPLL
C389
C385
AVDD_OTG
C390
AGND
H1
H2
H3
H4
H5
H6
AGND
CN1
12V
S5V
D17
D11
3.3V
R335
ON_PANEL
R61
C12
R66
Q5
R65
R67
Q3
U1
S
D
G
C11
D14
R69
VCC-PANEL
CE5
C8
Table:
size | panel brand | Mount
15" | CMO/SVA/BOE | D11,D19
19",20",22" | CMO/SVA/BOE | L27
20" | LG | L36
12V
R184
16V
R185
ZD6
Q15
For compatible 24v input
R163
U15
12V
12V_SW
R151
C61
CE9
R169
12V_AU
R148
Q1
D15
R162
C221
C62
CE15
3.3V
S5V
R329
R319
H:ON
L:OFF
STB_CN
R100
U3
5V_SW
C29
R98
CE8
C15
D13
R99
PWR_CN
R320
L:ON
H:OFF
C215
Q26
C32
R96
Q8
U5
3.3V
3.3V_SW
R334
R124
12V#
U19
EN
IN
SS
GND
FB
BS
OUT
COMP
R243
C115
R126
C100
C66
12V_SW
L26
L29
L27
12V
C287
CE503
C153
CE505
D113
C148
R140
C73
C282
CE115
STB_CN
For compatible 24v input
KAMEO 19"
Title
POWER
Size
A
Document Number
Rev
1.0
Date:
2008/05/05
Sheet
1
of
6

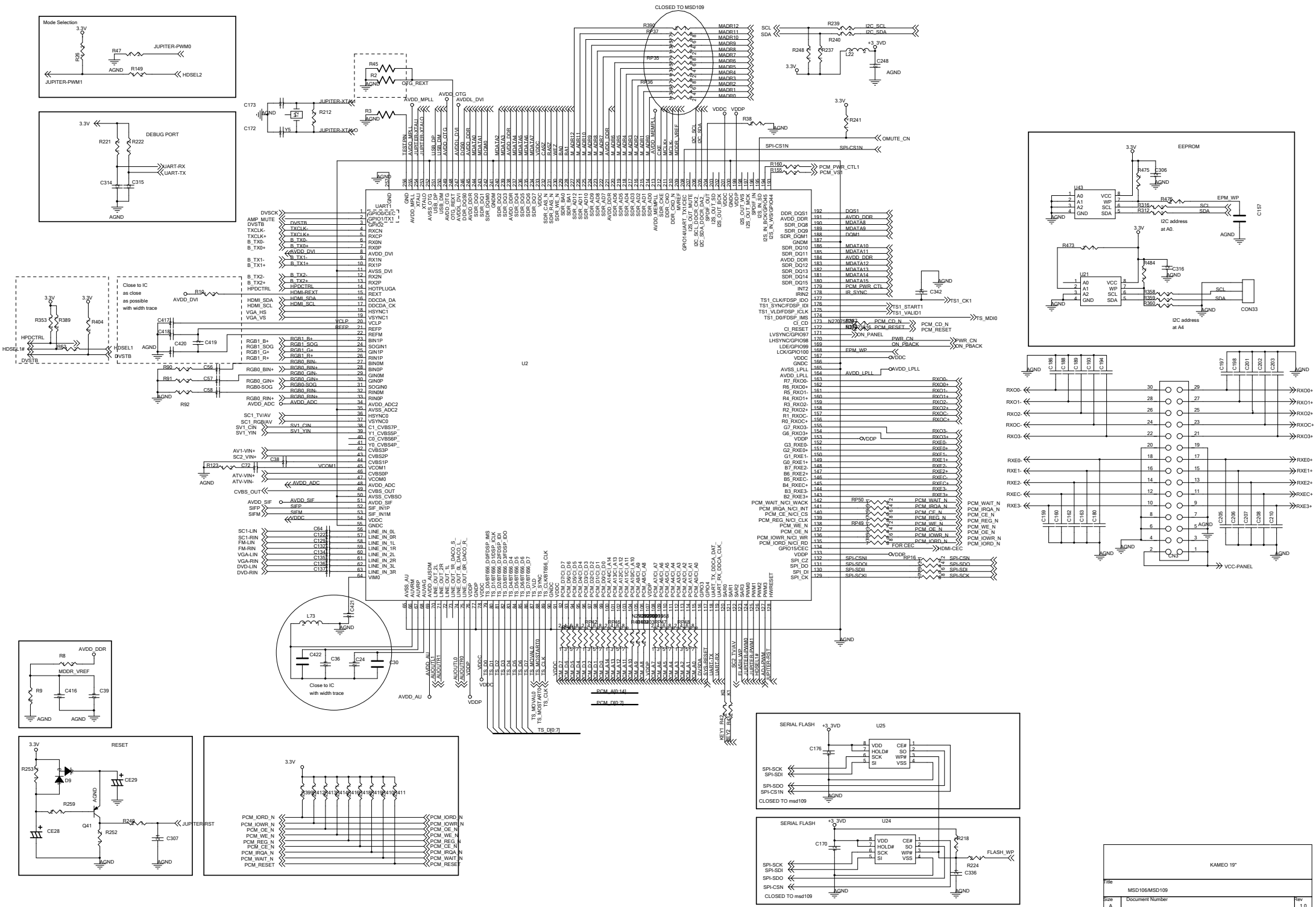
Mode Selection
JUPITER-PWM0
JUPITER-PWM1
HDSEL2
DEBUG PORT
UART-RX
UART-TX
CLOSED TO MSD109
OTG_REXT
JUPITER-XTAI
JUPITER-XTAO
U2
UART1
EEPROM
U43
U21
CON33
I2C address at A0.
I2C address at A4
CN3
VCC-PANEL
Close to IC as close as possible with width trace
Close to IC with width trace
RESET
JUPITER-RST
SERIAL FLASH
U25
U24
CLOSED TO msd109
KAMEO 19"
MSD106/MSD109
Document Number
Rev 1.0
Sheet 1 of 6
Date: 2008/05/05

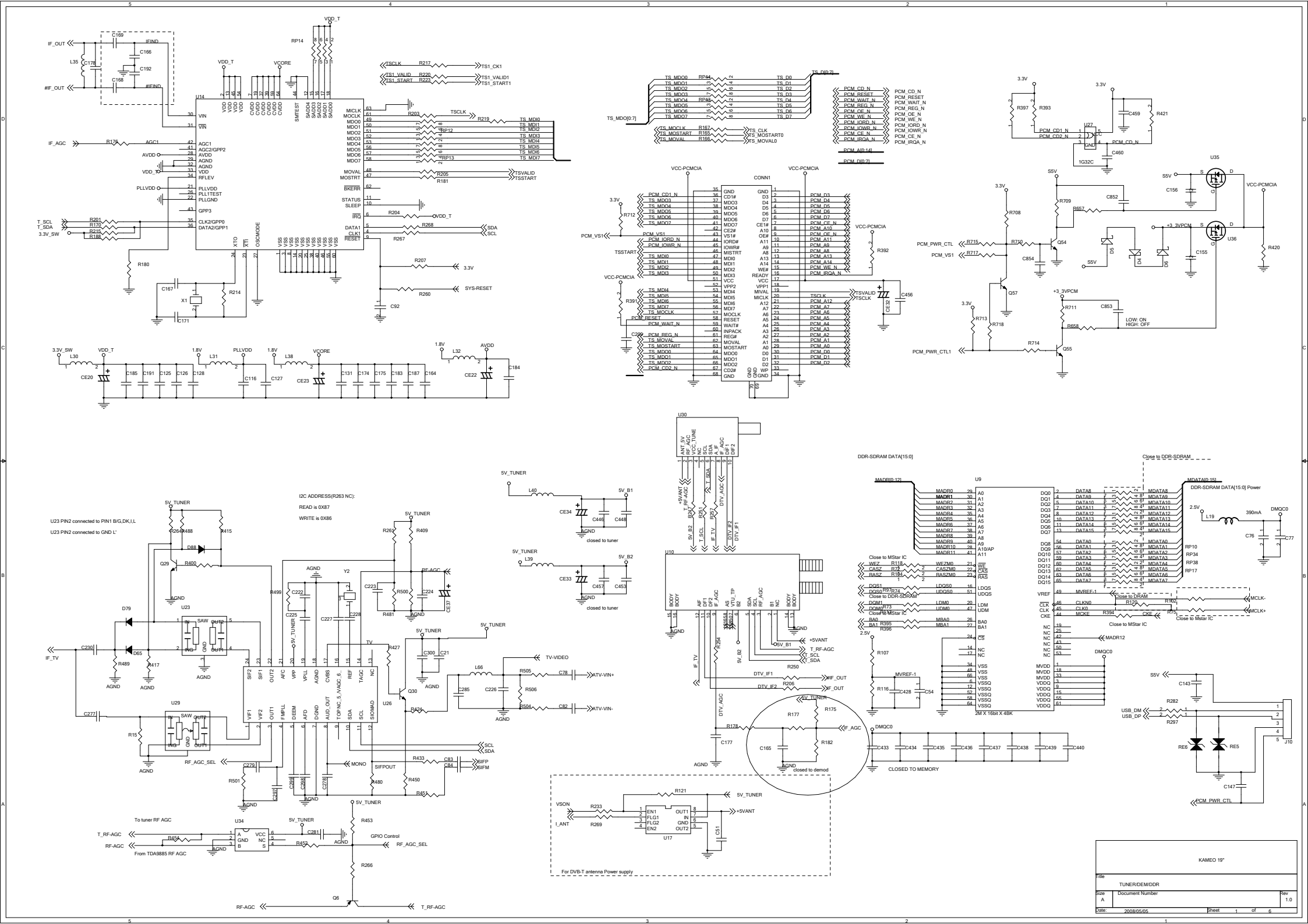
U14
U23 PIN2 connected to PIN1 B/G,DK,I,L
U23 PIN2 connected to GND L'
I2C ADDRESS(R263 NC):
READ is 0X87
WRITE is 0X86
DDR-SDRAM DATA[15:0]
DDR-SDRAM DATA[15:0] Power
Close to DDR-SDRAM
Close to MStar IC
Close to DRAM
closed to tuner
closed to demod
CLOSED TO MEMORY
To tuner RF AGC
From TDA9885 RF AGC
GPIO Control
For DVB-T antenna Power supply
KAMEO 19"
TUNER/DEM/DDR
Document Number
Rev 1.0
Date: 2008/05/05
Sheet 1 of 6

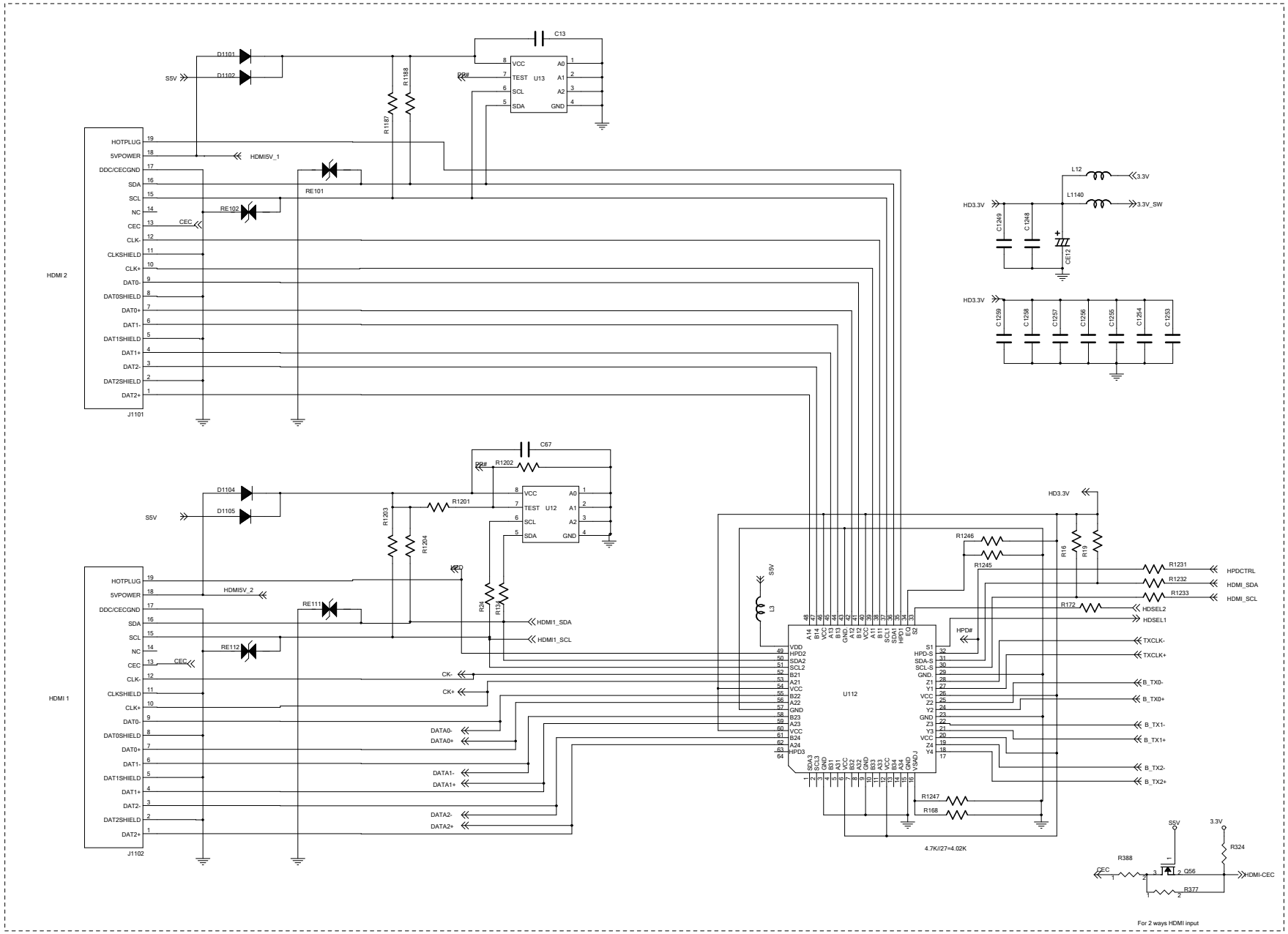

KAMEO 19"

Title	HDMI INPUT		
Size A	Document Number		Rev 1.0
Date: 2008/05/05		Sheet 1 of 6	

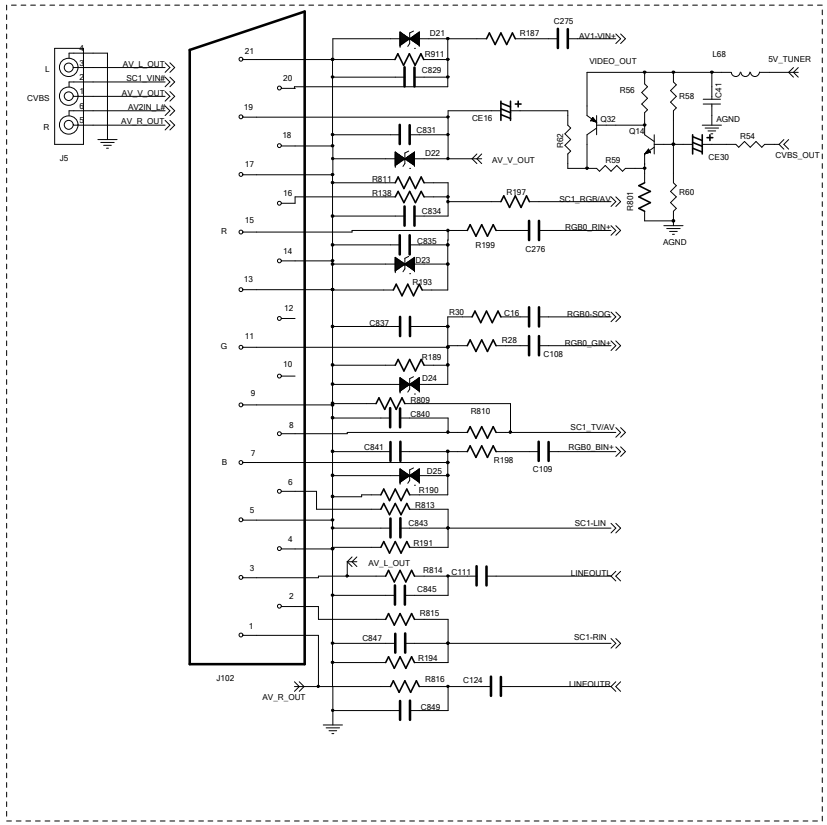

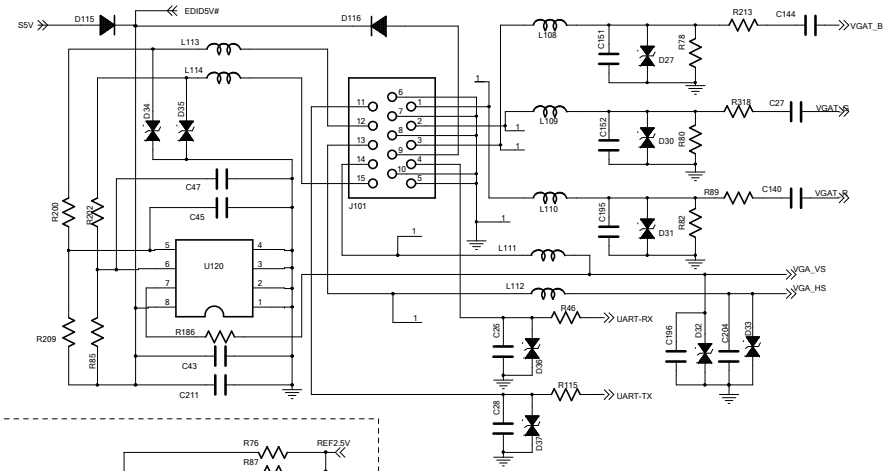

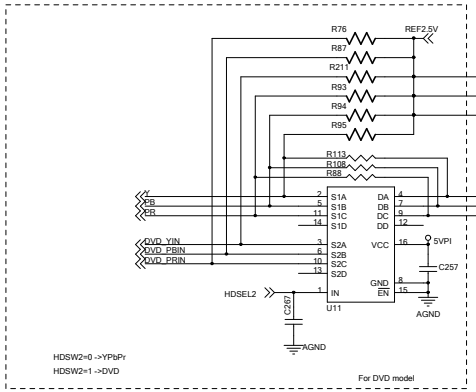

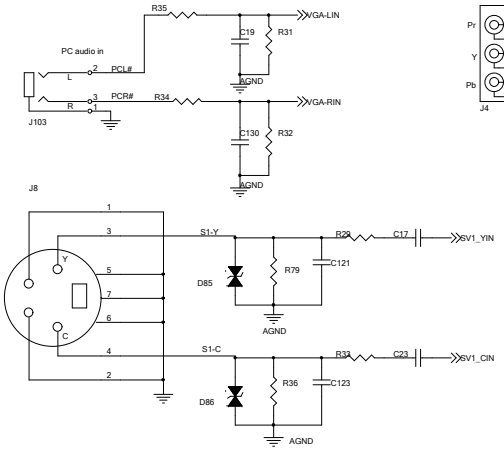

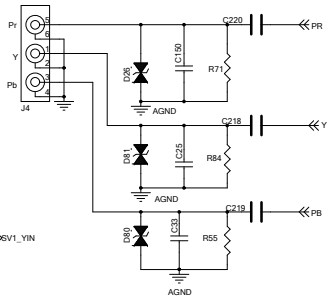

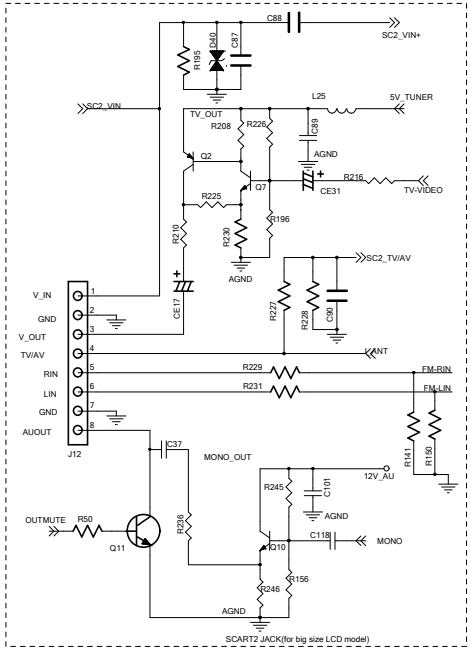

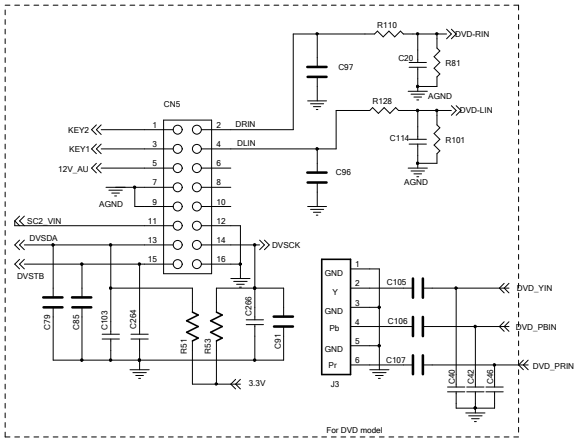

KAMEO 19"			
Title	TERMINAL		
Size A	Document Number		Rev 1.0
Date: 2008/05/05	Sheet 1 of 6		

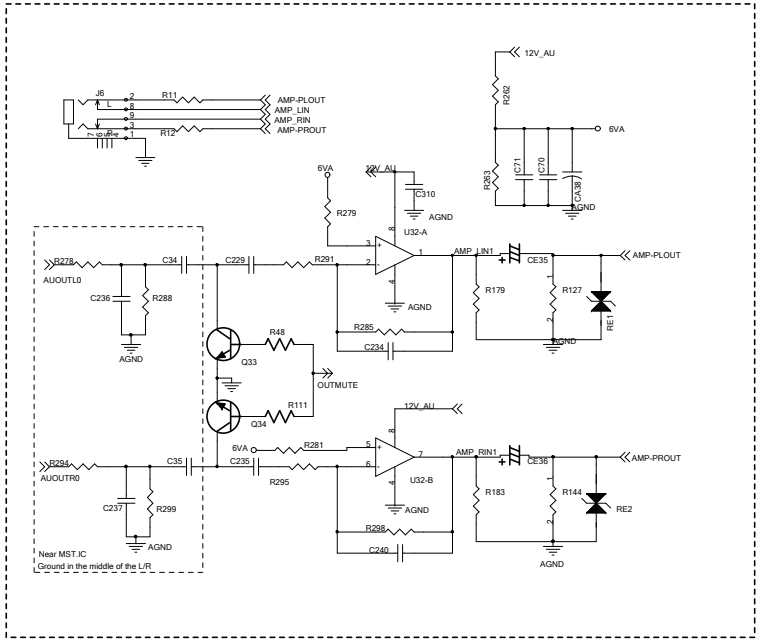

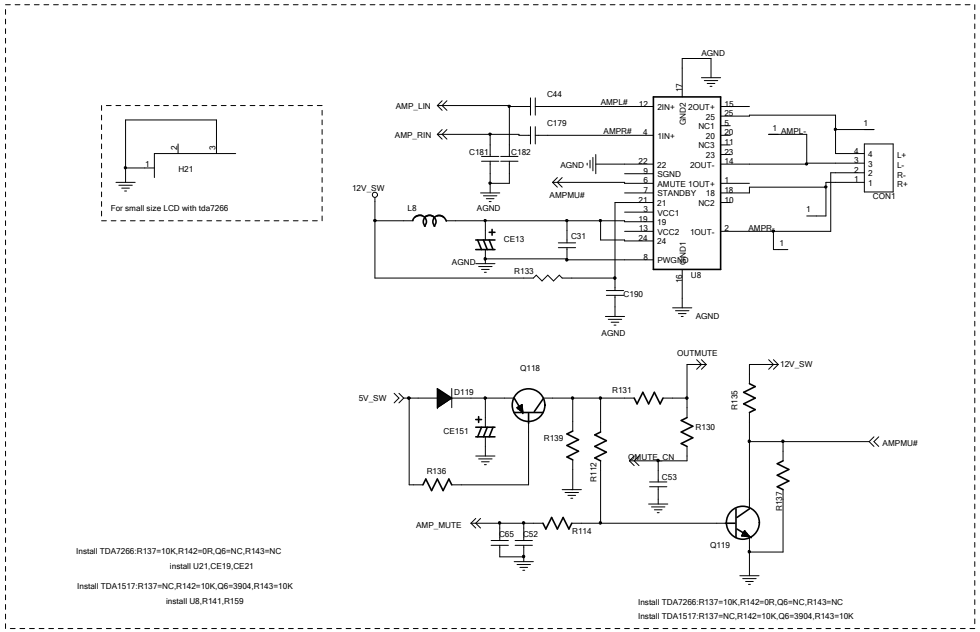

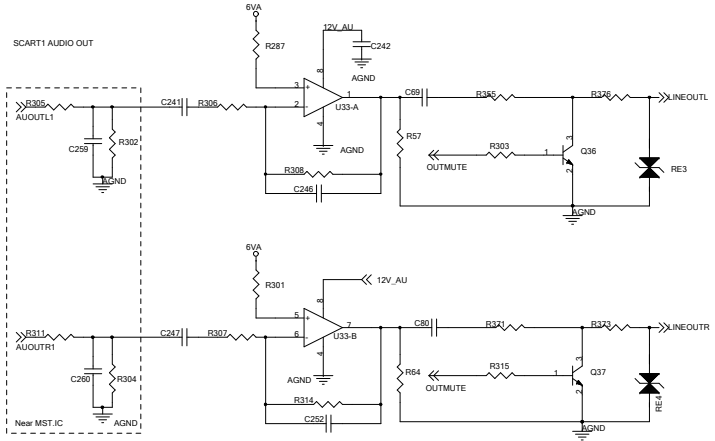

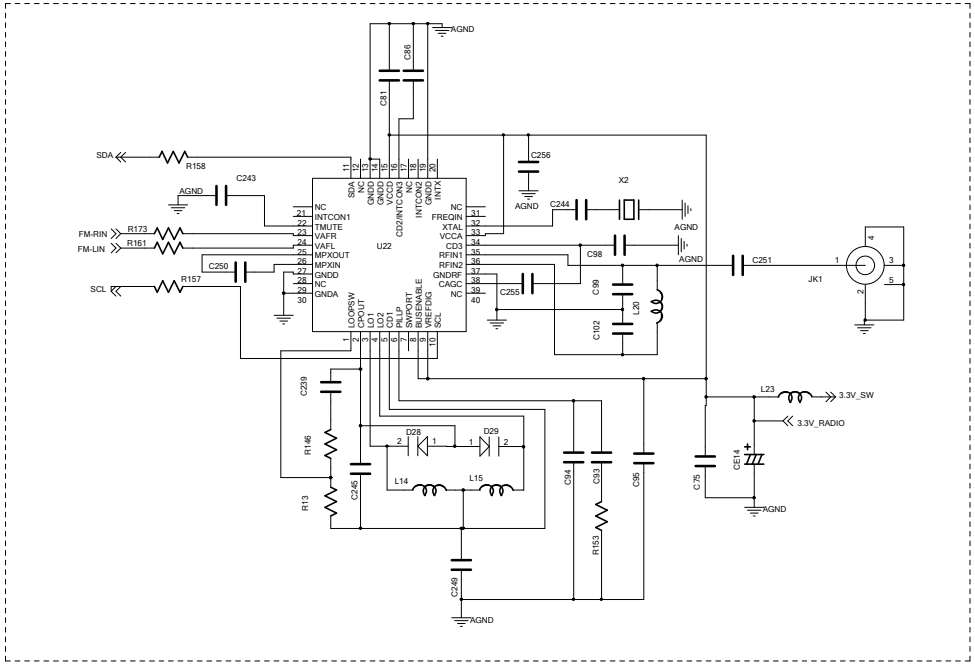

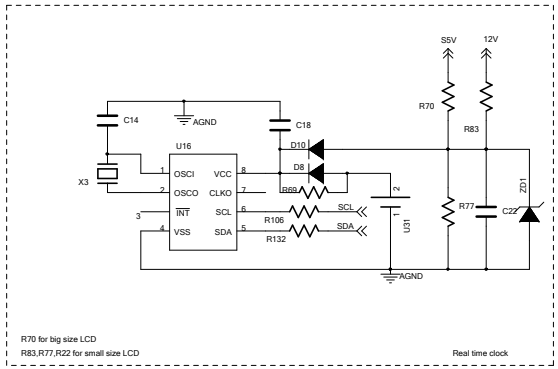

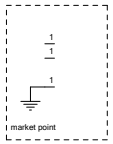

KAMEO 19"		
Title: AUDIO/FM RADIO		
Size: A	Document Number	Rev: 1.0
Date: 2008/05/05	Sheet 1 of 6	