NorStone

Wiim Sound Wall Mount


M6x15

A1 x1


M4x10

A2 x3

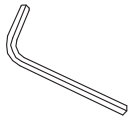
4mm

A3 x1


A4 x1


A5 x2


A6 x2


A7 x2


B1 x1

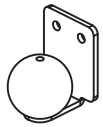
B2 x1

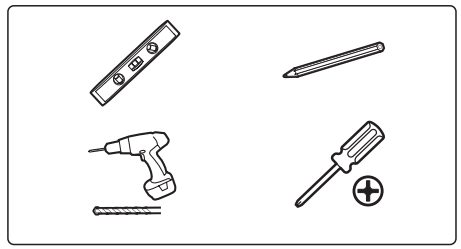

1

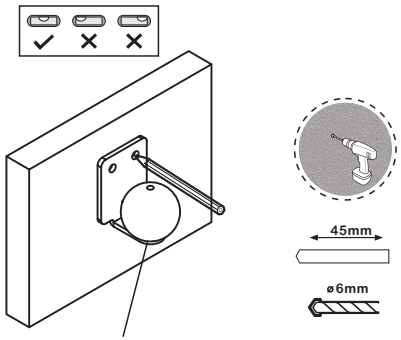

B2 x1

2

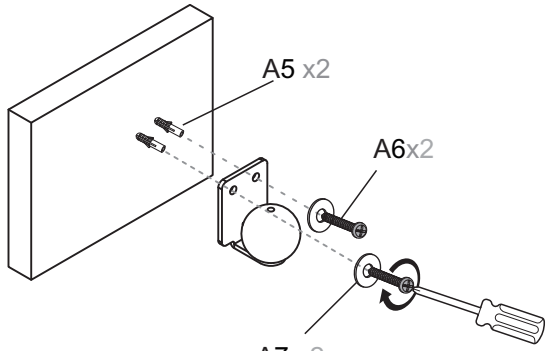

3

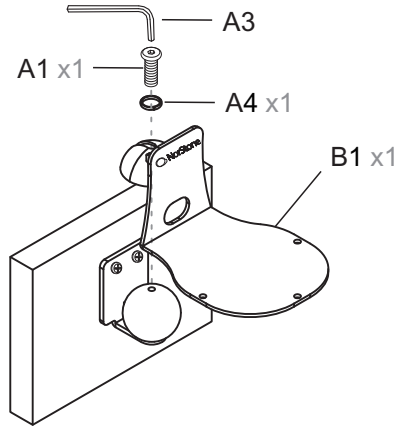

4

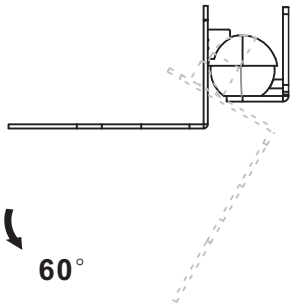

5

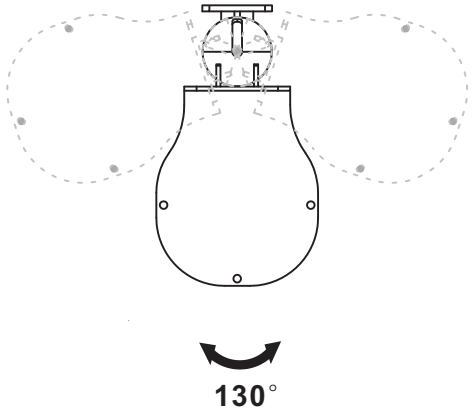

6

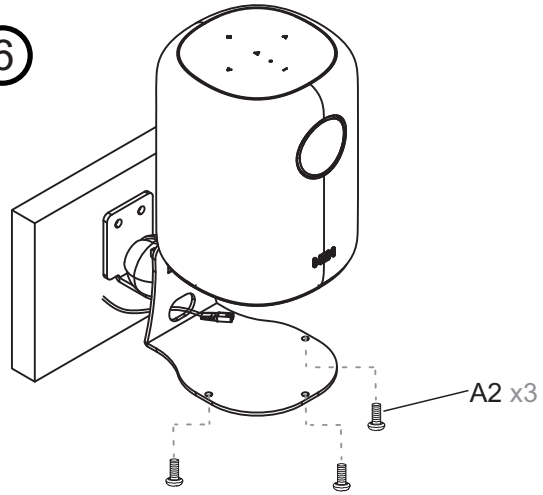

Update:2025/09/15

http://www.norstone-design.com

AV Industry SAS - www.av-industry.com
309 Avenue du Général de Gaulle - 94500 Champigny-sur-Marne - FRANCE