Roomba® Plus 675 - 679

# Combo Robot + AutoWash™ Dock

owners guide

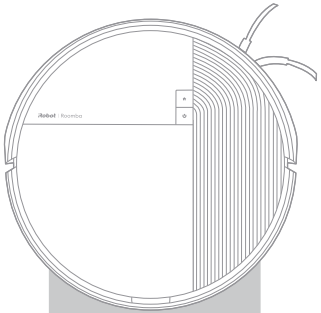

iRobot

# Getting Started

EN

1 **Remove the Bumper Strips from both sides of the Robot. Peel off the protective film on the front.**

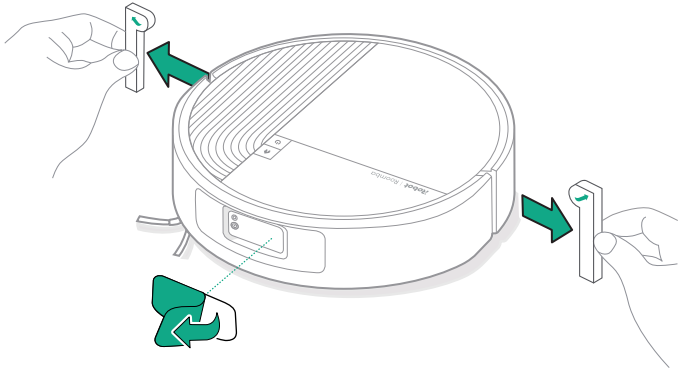

2 **Install the Side Brush.**

Align the Side Brush with the mounting post on the Robot and press down until you hear a "click".

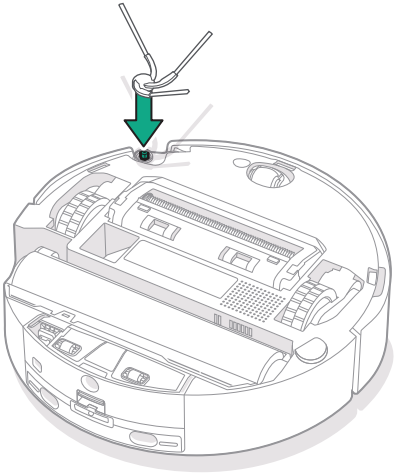

3 Place the Dock on a hard and level floor.

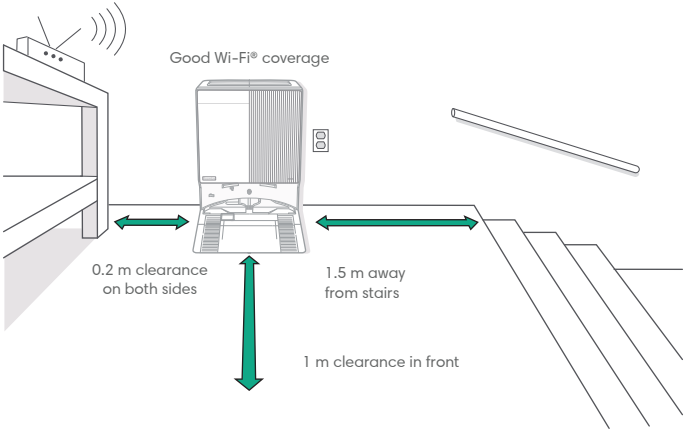


**Note:** Keep the Dock away from direct sunlight exposure. Ensure the area around the Dock is free of clutter so that the Robot can successfully return to the Dock.

**WARNING:** To prevent the Robot from falling down stairs, ensure the Dock is at least 1.5m away from the stairs.

4 Plug the Power Cord into the power inlet on the back of the Dock.

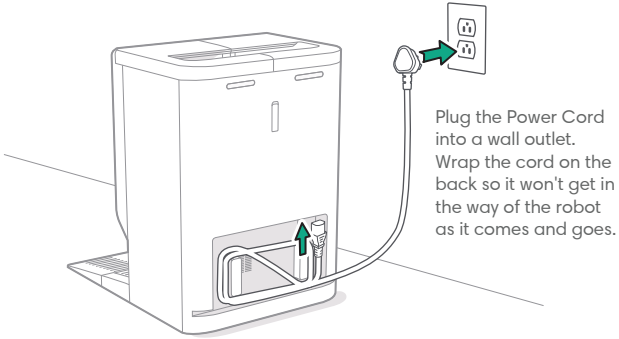


5 Align the Dock to install the Ramp Plate. Press down firmly until it clicks into place.

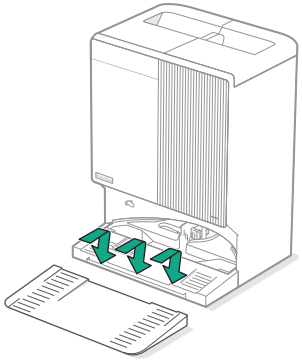

EN

EN

## 6 Fill with clean water.

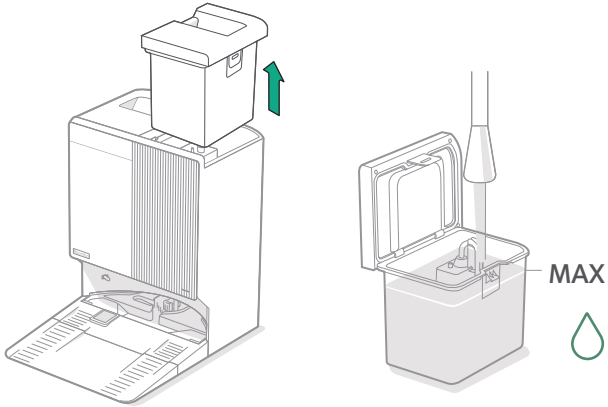


Remove the Clean Water Tank (right) from the Dock. Fill the Clean Water Tank with clean water.

## 7 Install the Cleaning Solution.

Remove the Dock panel and place it on a stable surface.
Insert the Detergent Cartridge into the designated position as shown in the figure.
Push the Cartridge inward until it is properly installed.

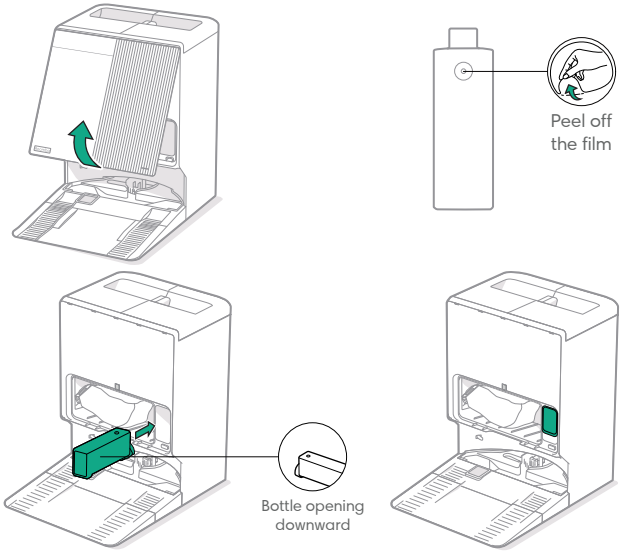


**Important:** 1. Do not use non-official cleaning solution or any other cleaning products, as this may damage the device.
2. The Dock automatically dispenses cleaning solution. It is not recommended to manually add cleaning solution to the Clean Water Tank.
3. When the cleaning solution in the Dock runs out, promptly replace it with the specified cleaning solution to maintain the cleaning performance.

## 8 Power on and wake up the Robot.

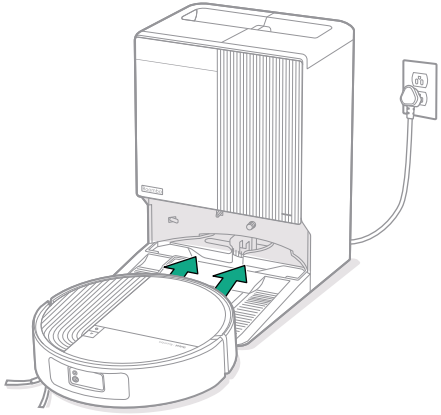

Place the Robot in front of the Dock in the direction shown in the figure, and slowly push it forward until it contacts the Charging Contacts of the Dock. The indicator will turn white, indicating that the Robot is powering on. You will then hear a voice prompt, indicating that the Robot is fully powered on and awake.

**Note:**
- For first-time use, after the Dock is powered on, gently push the Robot into the Dock to wake it up.
- When using the Robot in a new environment, have it start from the Dock to generate a new map.
- Although the Robot comes with a small amount of residual charge, it is recommended to charge it for 4 hours before the first cleaning cycle.
- To remove the Robot from the Dock, slide it toward you and then lift it out.
- New products are subjected to water testing before leaving the factory, so a small amount of residual water may be present. This is normal.

## 9 Download.

Scan the QR code with your mobile device's camera, or search for Roomba® Home in your App store. The Roomba® Home app and a Wi-Fi connection are required to complete setup. Wi-FiThe APP will guide you through the network configuration.

EN

## Add device.

After the robot powers on, tap "Connect" to configure the network;

Download on the App Store

GET IT ON Google Play

Once the Robot is set up in the app, you will be able to:

- Control when, where, and how it cleans
- Set up scheduled schedules
- Customize cleaning preferences
- Access tips, tricks, and FAQs

**Important:** Wi-Fi connectivity only supports 2.4 GHz networks; 5 GHz networks are not supported.

EN

# Charging

## Illustration of Indicator Lights

| | | |
|---|---|---|
| | White | Standby / Cleaning / Returning to Dock |
| | Pulsing white | Powering on / Charging / Connecting to Wi-Fi / Firmware update in progress |
| | Flashing white | Returning to Dock after interruption / Downloading firmware update / Factory reset in progress |
| | Flashing red | Robot error |
| | Light off | Powered off / Sleep mode |

## Recharge and Resumed Cleaning

When the Robot needs to recharge, it will return to the Dock. Once it has charged enough to complete the remaining cleaning task, it will resume cleaning from where it left off.

## Standby Mode

The Robot consumes a small amount of power while on the Dock. When not in use for an extended period, you can press and hold ⏻ for 10 seconds to power off the Robot. To power it back on, press ⏻ for 3 seconds.

# Cleaning

## Button Controls

| | | | |
|---|---|---|---|
| Home Button | Press | If Robot is outside Dock | Send Robot to the Dock |
| | | If Robot is on Dock | Wash mopping pads |
| | Double-Press | If Robot is outside Dock | Activate Spot Cleaning |
| | Press and hold this button for 10s, and press the Power Button within 5s | Factory reset | |

| | | |
|---|---|---|
| Power Button | Press | Start / pause cleaning |
| | Press and hold for 3s | Power on |
| | Press and hold for 10s | Power off (with shutdown tone) |
| | Press and hold for 15s | Forced shutdown |

## Cleaning Settings

The Robot will automatically explore your home and clean in systematic, row-by-row passes. If the battery runs low during a cleaning cycle, the Robot will return to the Dock, and then resume cleaning from where it left off.

**Tips:**
Before cleaning, clear excessive clutter from the floor.
Frequent use of the Robot will keep your floors clean.

If you are unsure whether the Robot has finished cleaning or is paused, check its status in the Roomba® Home app.

**Note:** The Roomba® Home app and a Wi-Fi connection are required to complete setup. The mobile app allows you to clean specific rooms, schedule cleaning tasks, and set up automated work/schedules. It is strongly recommended to use the Roomba® Home app to control to control cleaning functions.

## Spot Cleaning

With the Robot outside the Dock, double-press the button to spot clean a designated area. Once Spot Cleaning is complete, the Robot will finish its task. Press to send it back to the Dock.

## Auto-Washing

Your Robot will automatically return to the Dock during and after each cleaning cycle to empty the dirty water and wash the Roller Mop.

**Note:** Roomba® robots are generally designed to vacuum on most floor types. However, because unfinished hardwood floors and certain laminate/vinyl floors or subfloors may be susceptible to water damage, we do not recommend using the Roller Mop on such flooring.

# About Your Roomba® Robot

EN

## Top View

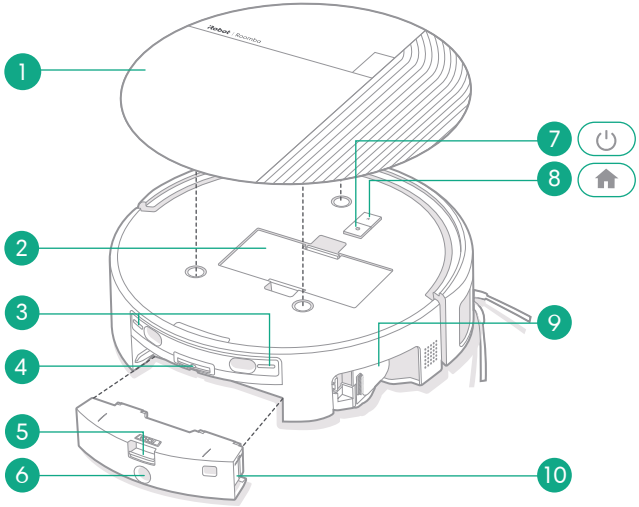


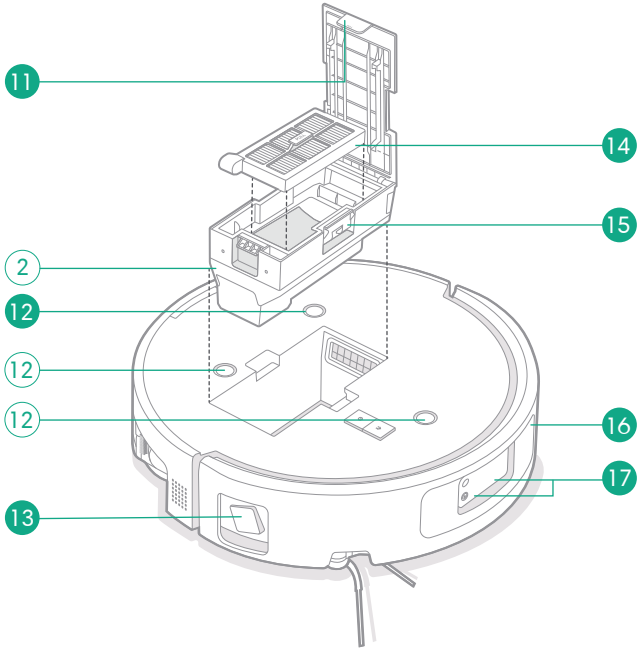


1 Robot Top Cover
2 Robot Dust Bin
3 Charging Contacts
4 Robot Water Spray Nozzle
5 Dirty Water Container Release Button
6 Clean Water Fill Port
7 Power Button
8 Home Button
9 Roller Mop Assembly
10 Robot Dirty Water Container

11 Filter Cover Release Button
12 Magnetic Top Cover Latch
13 Side Single-line Laser Edge Sensor
14 Filter
15 Dust Bin Release Button
16 Front Bumper Sensor
17 Navigation and Obstacle Avoidance Module+Fill Light

## Bottom View

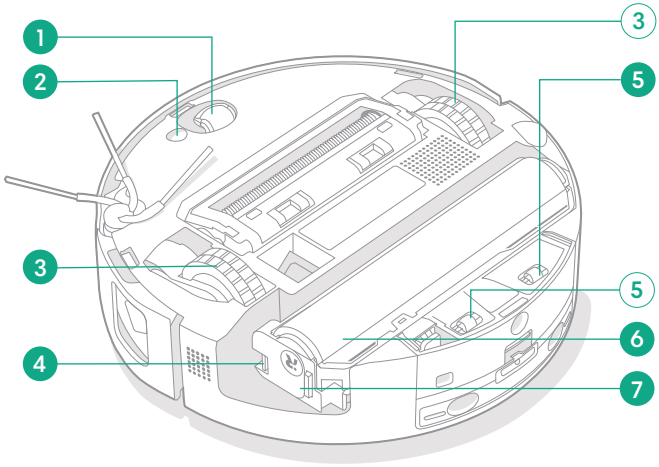


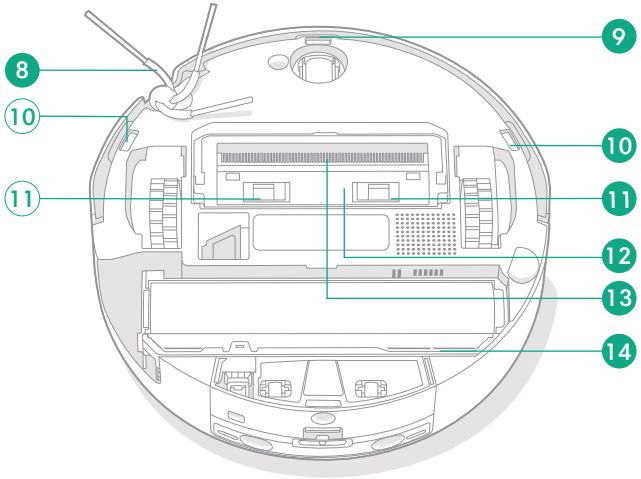


1 Liftable Universal Wheel
2 Ultrasonic Carpet Detection Sensor
3 Drive wheel
4 Roller Mop Release Button
5 Rear Auxiliary Wheel
6 Roller Mop
7 Roller Mop End Cap

8 Side brush
9 TOF Floor Detection Sensor
10 Infrared Floor Detection Sensor
11 Main Brush Cover Release Button
12 Main Brush Cover
13 Anti-tangle Main Brush
14 Roller Mop Scraper Groove

# About Your Roomba® Dock

EN

## Front View

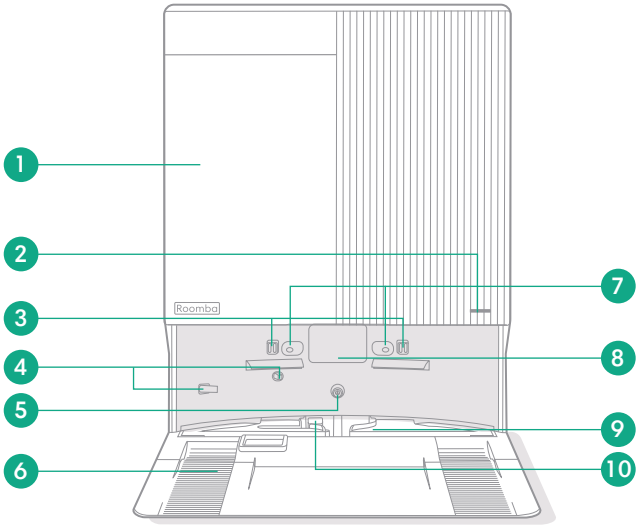


## Rear View

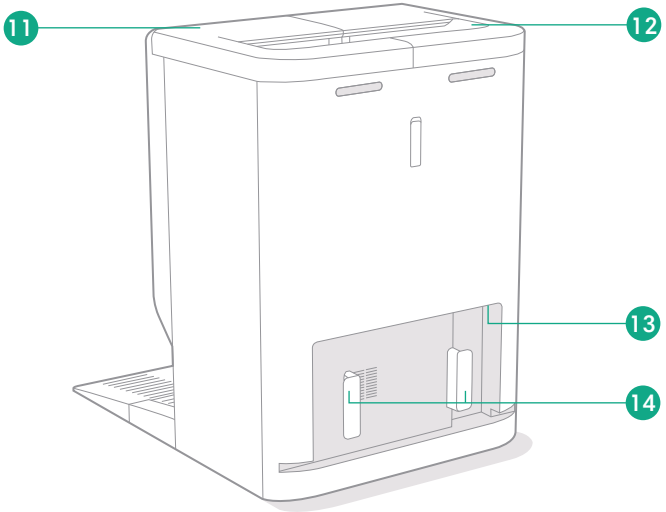


1 Dock Panel (To remove or install the Dirt Disposal Bag and Cleaning Solution, remove this panel)

2 Indicator Light

3 Dock Charging Contacts

4 Drainage Push Rod

5 Clean Water Inlet

6 Ramp Plate

7 Return-to-Dock Alignment Corner

8 Docking Signal Emission Area

9 Cleaning Tray

10 Float

11 Clean Water Tank

12 Dirty Water Tank

13 Power Cord Inlet

14 Cord Routing Slot

**Note:** The actual LED behaviors of the Robot and the Dock may change due to software updates.

## Internal View

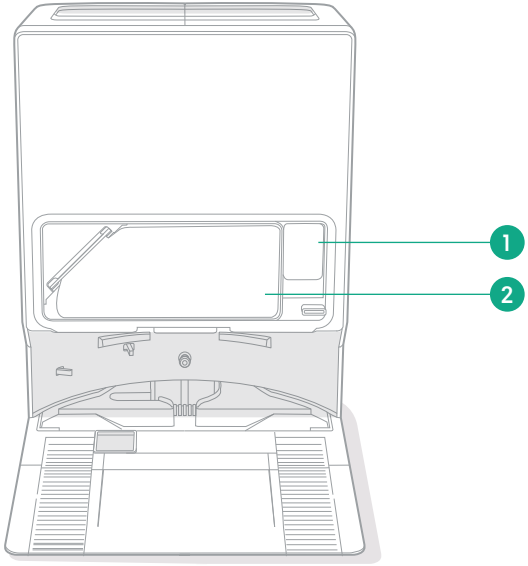


1 Detergent Cartridge

2 Dust Bag

## Top View

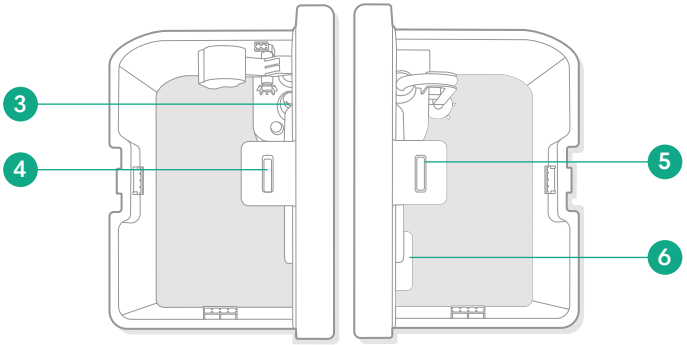


3 Dirty Water Tank Inlet

4 Dirty Water Tank Lid Latch

5 Clean Water Tank Lid Latch

6 Scale Inhibitor Module

EN

EN

## Dock LED Indicator

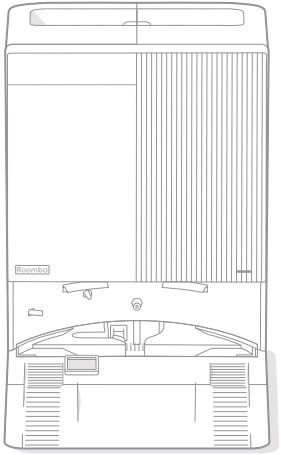


■■■ Pulsing white: Cleaning
Flashing red: Dock error
LED indicator off: Power off (Robot is on Dock)

**Note:** The actual LED behaviors of the Robot and the Dock may change due to software updates.

# Robot Care and Maintenance

To keep your Robot running at peak performance, it is essential to perform the following basic care and maintenance regularly.
The Roomba® Home App provides personalized reminders for accessory replacement and important maintenance needs. Additional instructional videos are available in the Roomba® Home App. If you notice the Robot is picking up less debris from the floor, replace the Disposable Dust Bag in the Dock and clean the brushes.

| Component | Maintenance Frequency | Replacement Frequency* |
|---|---|---|
| Main Brush Cover | Check every 6 months | Replace if worn or damaged |
| Charging Contacts | Clean every 2 weeks or as needed | – |
| Robot Dust Bin | Clean every 2 weeks or as needed | – |
| Side Brush | Clean every 2 weeks or as needed | Every 3-6 months |
| Anti-tangle Main Brush | Clean weekly | Every 3-6 months |
| Liftable Universal Wheel | Clean every 4 weeks (weekly if you have pets) | – |
| Drive Wheel | Clean every 4 weeks (weekly if you have pets) | – |
| Roller Mop | Clean as needed | Every 3-6 months |
| Roller Mop Scraper Groove | Clean every 2 months or as needed | – |
| Dustbin Filter | Clean every 2 weeks or as needed | Every 3-6 months |
| Sensors (Navigation and Obstacle Avoidance Module, Edge Sensor, Cliff Sensor, etc.) | Clean monthly or as needed | – |

* Replacement frequency may vary. Replace components if visible wear is present.

## Clean the Side Brush

Pull out to remove the Side Brush. Remove any hair or debris, then reinstall the Side Brush. You will hear a click when it is securely in place.

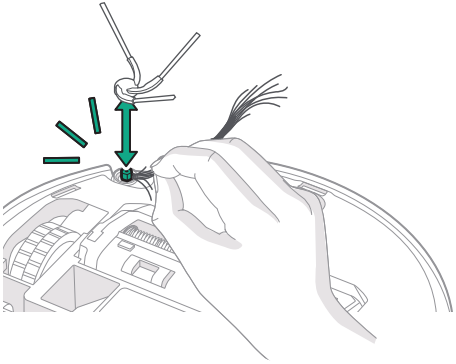

**Important:** It is recommended to replace the Side Brush every 3–6 months to maintain optimal cleaning performance.

## Clean the Roller Brush

1 Pinch the Main Brush Cover Release Buttons, lift the cover upwards.

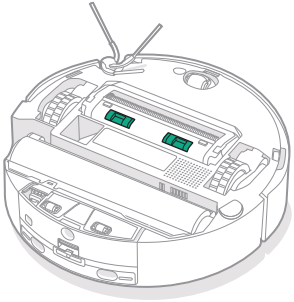

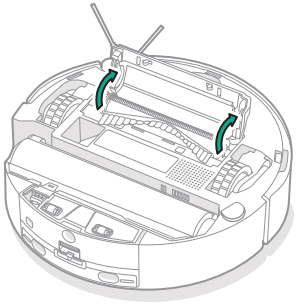

2 Remove the Main Brush.

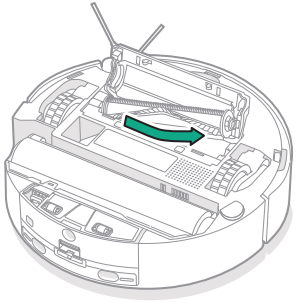

EN

EN

3 Detach the end cap from the end of the Main Brush.

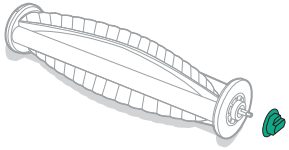

4 Remove any hair or debris tangled on the Main Brush and End Cap, check for any foreign objects between the cutter teeth, and clean them promptly. Reinstall the End Cap.

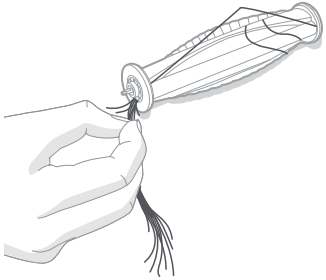

5 Reinstall the Main Brush and Main Brush Cover onto the Robot. Align and insert the 4 latches at the front of the Main Brush Cover, then press down on the rear of the cover. You will hear a click when it is securely in place.

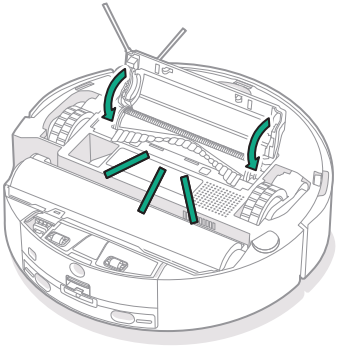

**Important:** It's recommended to replace the Main Brush every 6–12 months to maintain optimal cleaning performance.

## Clean the Universal Wheel

1 Use a cleaning brush or dry cloth to remove hair and debris from the universal wheel.

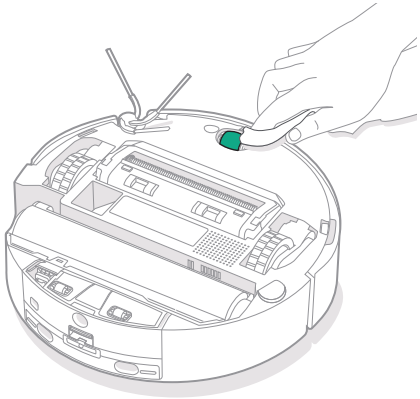

2 Use a tool to pry up the universal wheel and remove it from its housing.

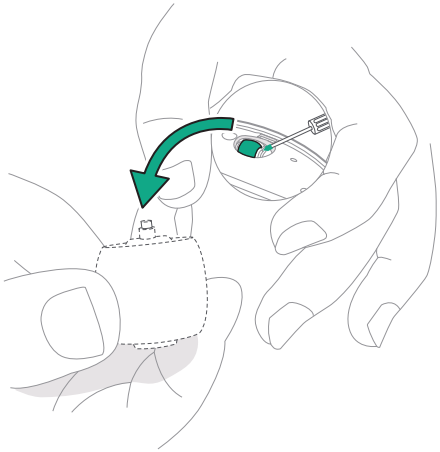

**Important:** A universal wheel jammed with hair and debris may cause floor damage. The universal wheel housing cannot be removed from the Robot. Only the universal wheel can be removed with a tool for maintenance.

EN

EN

## Clean the Rear Auxiliary Wheel

Use a tool to pry up and slide the Rear Auxiliary Wheel from right to left to disengage it from the metal shaft. Slide off the Rear Auxiliary Wheel, then use a cleaning brush to remove hair and debris from behind it.

Rear Auxiliary Wheel

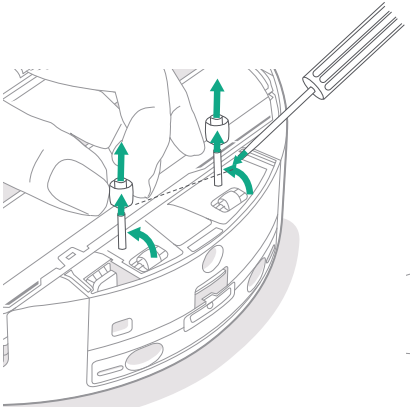

## Clean the Charging Contacts and Sensors

Wipe the charging contacts and sensors with a clean, dry cloth.

Charging Contacts

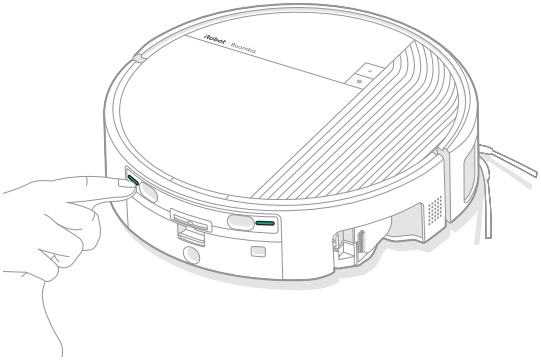

Sensors

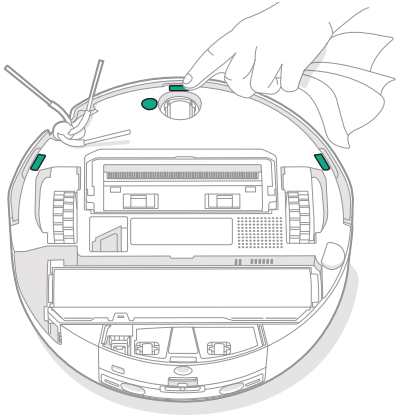

**Important:** Do not spray cleaning solution or water onto the sensors or sensor openings.

## Clean the Dirty Water Container

1 Press down on the Dirty Water Container Release Button to remove the container.

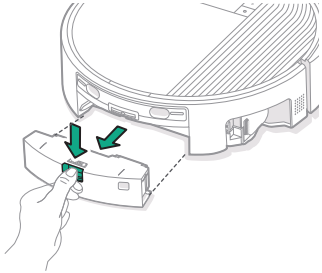

2 Flip open the Dirty Water Container Cover.

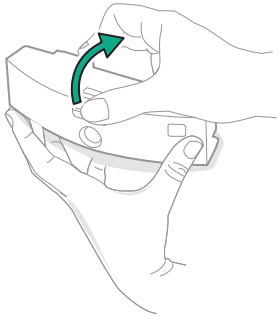

3 Empty the dirty water, rinse the container under clean water, and wipe away any residue.

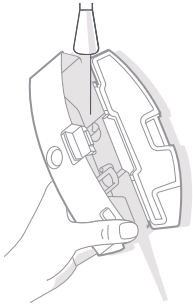

4 Rinse and wipe away any residue from the top surface of the container.

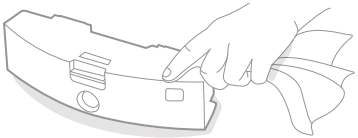

5 Wipe away any residue from the bottom of the Robot. This area must remain free of residue to ensure the container slides correctly into the Robot.

6 Reinstall the Dirty Water Container into the Robot. You will hear a "click" when it is securely in place.

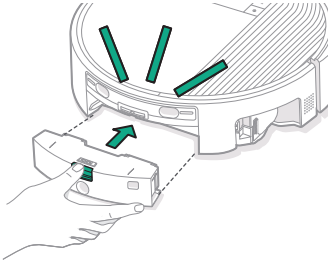

**Important:** Do not clean the Dirty Water Container in a dishwasher. Clean the Container thoroughly to maintain optimal cleaning performance.

EN

## Clean the Roller Mop

EN

1 Press and hold the Roller Mop Release Button on the side, then slowly pull out the Roller Mop horizontally.

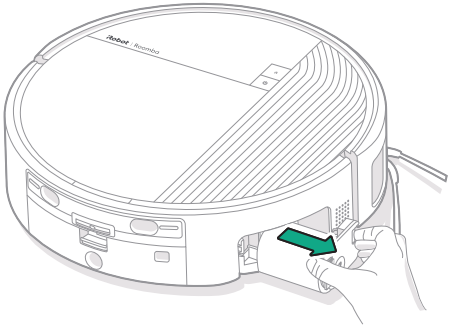

2 Clean and rinse the Roller Mop, then allow it to air-dry at room temperature.

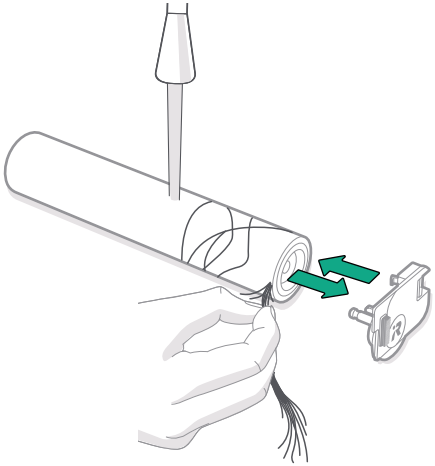

**Note:** When removing the roller mop end cap, pull it out with moderate force. When reinstalling, press it firmly into place.

3 Align the Roller Mop with the end cap, push it in and press firmly until you hear a "click", indicating it is securely in place.

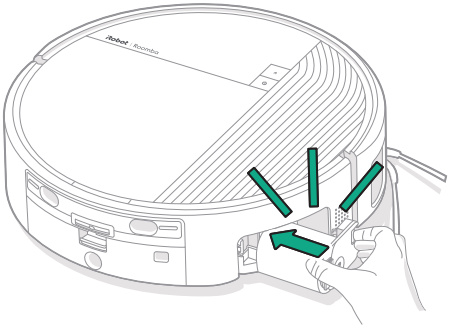

**Note:** When installing the Roller Mop, make sure the green release button on the End Cap is positioned at the upper right corner. Align the End Cap with the Robot, then push it horizontally inward until you hear a "click," indicating it is securely in place.

## Clean the Roller Mop Scraper Groove

1 Press and hold the release button on the side, then slowly pull out the Roller Mop horizontally.

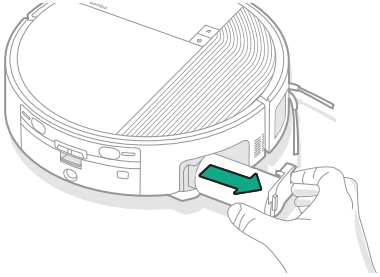

2 Flip the Robot over, push the left side of the Roller Mop Scraper Groove forward, and pull it out to the left.

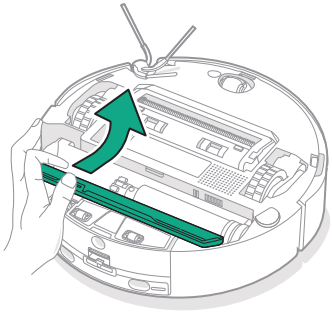

3 Rinse or wipe the Roller Mop Scraper Groove.

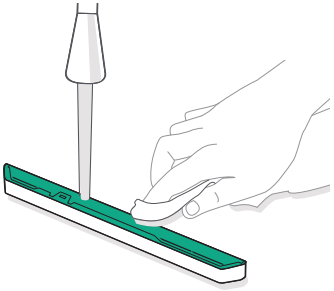

4 Align the Roller Mop Scraper Groove with the slot on the right, insert it, firmly press the left side backwards to secure it.

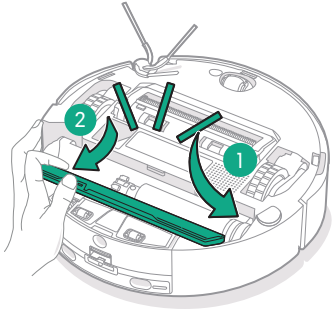


**Important:** Ensure the Roller Mop Scraper Groove is properly installed. If it is not securely fastened, the Roller Mop will be difficult to reinstall.

EN

EN

## Clean the Robot Dustbin and Filter

1 Lift upward to remove the Robot's Top Cover.

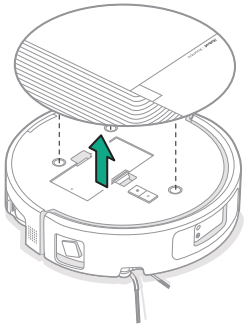

2 Press and hold the Dust Bin Release Button to remove the Dust Bin.

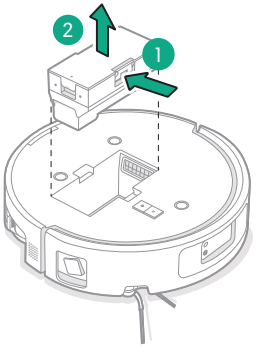


3 Open the Dust Bin Cover and remove the Filter.

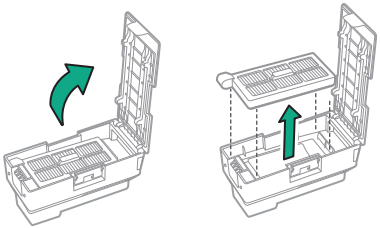

4 If necessary, rinse the Filter with clean water. Allow it to dry completely before reinstalling.

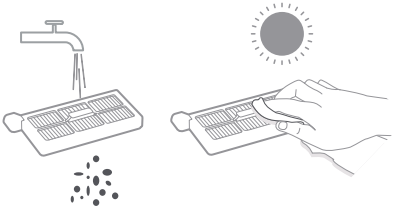

5 Empty and clean out the dust and debris from the Dust Bin.

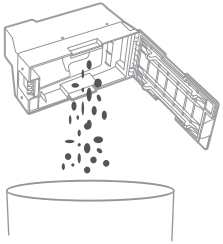

**Important:** The Filter Cover is washable, but must be completely air-dried before reinstalling it into the Dust Bin. Do not clean the Dust Bin in a dishwasher.
Do not use a brush or your fingers to clean the Filter.
Wash the Dust Bin and Filter with clean water only. Do not use any detergent.

6 Reinstall the Filter Cover onto the Filter. Install the Filter. Reinstall the Dust Bin into the Robot.

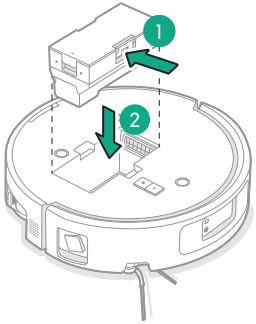


7 Close the Robot Top Cover.

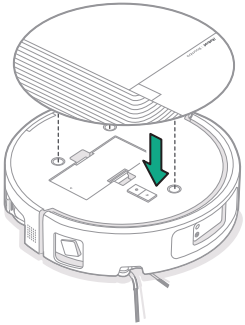

# Dock Care and Maintenance

To keep the Dock performing at its best, follow the procedures outlined on the following pages.

| Component | Maintenance Frequency | Replacement Frequency* |
|---|---|---|
| Dock Charging Contacts | Monthly | - |
| Sensors | Clean monthly | - |
| Return-to-Dock signal emission area | Clean monthly | - |
| Cleaning Tray | 2 Clean every 2 weeks or as needed | - |
| Clean Water Tank | Rinse and change the water as needed | - |
| Dirty Water Tank | Rinse and empty as needed | - |
| Ramp Plate | Clean monthly | - |
| Dust Bag | - | Replace as needed |
| Detergent Cartridge | - | Replace as needed |

* Replacement frequency may vary. Replace components if visible wear is present.

EN

EN

## Clean the Dock Charging Contacts and Infrared Window

1 Check the components to ensure there is no debris. Wipe carefully with a clean, dry cloth.

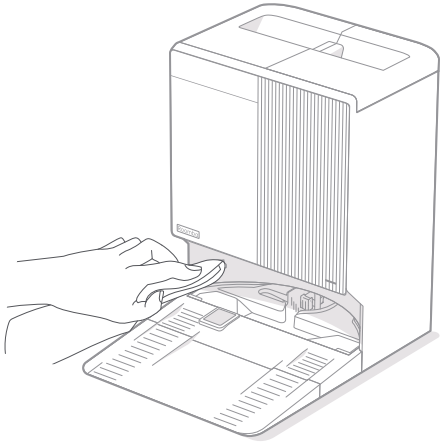

**Important:** Do not spray cleaning solution or water onto the sensors or sensor openings.

## Clean the Cleaning Tray

1 Carefully rinse or wipe away debris in and around the Cleaning Tray. Ensure the Clean Water Fill Port and Dirty Water Suction Port are free from any obstructions. A mild soap and a sponge may be used to remove stubborn debris.

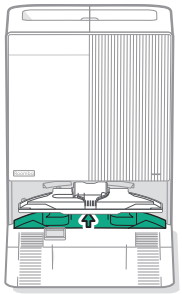

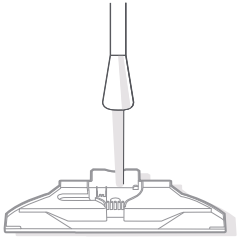

2 After cleaning, make sure the Cleaning Tray is securely installed in place.

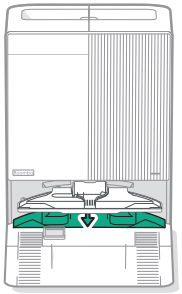

## Clean the Water Tanks

1 Remove and clean the Dirty Water Tank to prevent odors and mold.

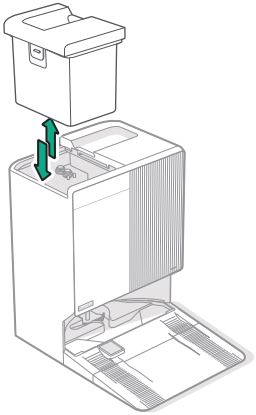

2 Empty the Dirty Water Tank and rinse it clean with water.

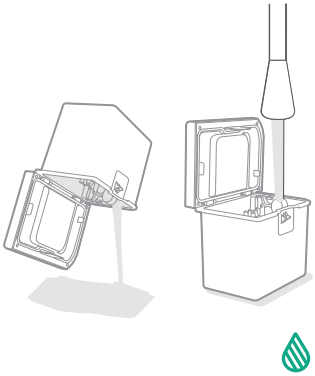

3 Rinse both tanks with room-temperature water. A sponge can be used to remove stubborn debris.

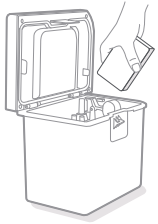

4 Refill the Clean Water Tank with clean water.

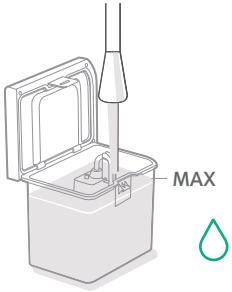


5 Install both tanks back into the Dock.

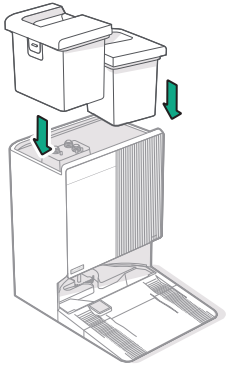

**Important:** The Floats in the Clean Water Tank and the Dirty Water Tank are movable parts. Be careful when cleaning them to avoid damaging their function.
Do not place the tanks in a dishwasher.
Before reinstalling, ensure the tank latches are securely closed.

EN

EN

## Replace the Cleaning Solution

Remove the Dock panel and place it on a stable surface.
As shown in the figure, remove and discard the empty Detergent Cartridge, then take out a new Cleaning Solution and install it in the designated position. Push the Cleaning Solution inward until it is properly installed.

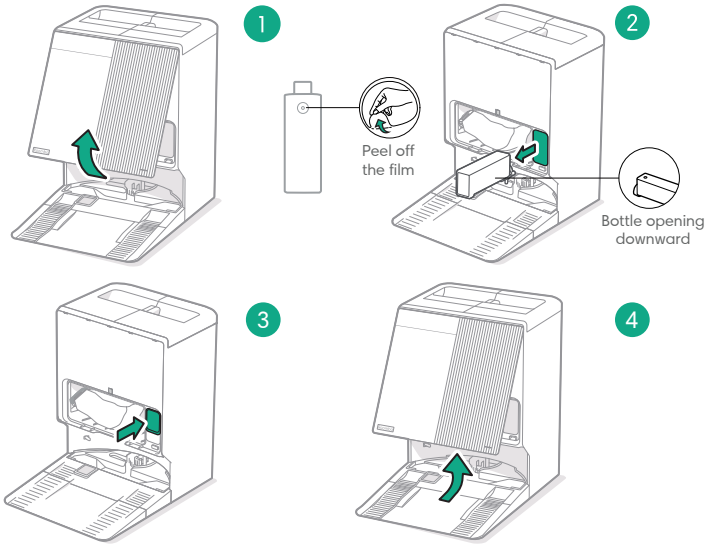


**Important:** Roomba® StayClean™ Mopping Concentrate is currently the only cleaning solution approved for use with this product. Do not use any other cleaning solution.

## Replace the Dirt Disposal Bag

1. When the Dirt Disposal Bag needs to be replaced, open the Dock Panel, pull the Dirt Disposal Bag Handle to remove the Bag, and discard it. Insert a new Dirt Disposal Bag and push the Handle into the slot, ensuring it is properly installed.
2. Align the latches and reattach the Dock Panel. You will hear a click when it is securely in place.

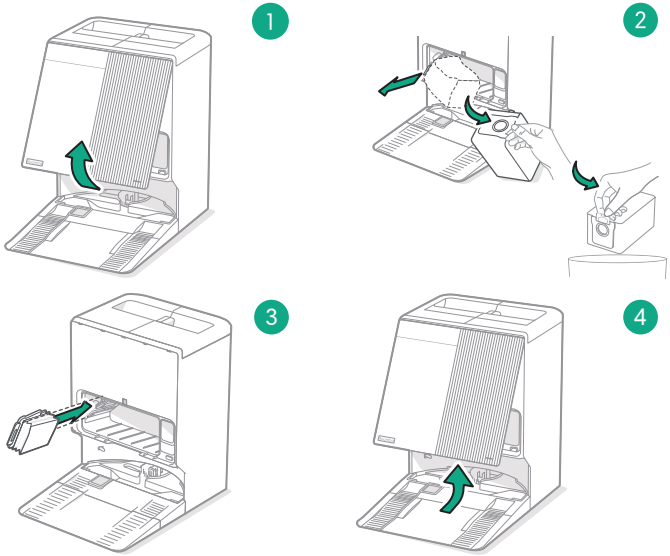

# Troubleshooting

| Error Indications | Solutions |
|---|---|
| Unable to power on | Battery is low. Please fully charge before use. |
| Unable to start: battery low | Please allow Robot to charge its battery sufficiently and try again. |
| Could not reach its dock | Make sure the path is clear for Robot to return to its Dock. Check that the dock is plugged in and in its original location. |
| Unusual noise during cleaning | The Main Brush, Side Brush, Left/Right Wheel, or roller mop may be tangled with foreign objects. Power off the Robot and clean. |
| Reduced cleaning performance or debris loss | The Dust Bin is full. Clean it. The Main Brush is tangled with foreign objects. Clean it. |
| Robot offline | Poor Wi-Fi signal. Ensure the Robot is within good Wi-Fi coverage. Wi-Fi connection abnormal. Reset Wi-Fi and download the latest app, then try reconnecting. |
| Unable to charge | Ensure there is enough space around the Dock, and the Charging Contacts on the Dock are free of dust and obstructions. The ambient temperature is too low (below 0°C) or too high (above 40°C). |

| Error Indications | Solutions |
|---|---|
| Unable to connect to app | Ensure both the Dock and the Robot are within Wi-Fi coverage with a strong signal. Reset the Wi-Fi as instructed in the manual before pairing them again. |
| Unable to wash mop | The Dock's Clean Water Tank is out of water. Please refill with clean water. The Clean Water Outlet is blocked. Clear the blockage. Dock's Cleaning Tray is full. Please clean the tray. The Cleaning Tray is not installed. Install it. The Dirty Water Tank is full. Empty it. |
| Main brush is stuck | Clear obstacles or tangled fibers from the brush so it can spin freely |
| Main Brush tangled. Clean and continue | Main Brush is tangled with foreign objects. Clean and restart the task. |

# Troubleshooting

EN

| Error Indications | Solutions |
|---|---|
| Side brush is stuck | Pull tangled fibers and debris from the side brush can spin freely. |
| Left Wheel stuck/Right Wheel stuck | Push Left/Right Wheel up and down a few times, then spin it to loosen trapped debris. It should spin freely. |
| Clean Cliff Sensors | Clean the bottom Cliff Sensors with a soft, dry cloth so stairs can be accurately detected. Place Robot on the floor and press the start button to resume cleaning. |
| Navigation and Obstacle Avoidance Module blocked, please wipe and continue | 1. Navigation and Obstacle Avoidance Module is blocked. Please wipe away the blockage or foreign object;<br>2. If clearing is not needed, please move the Robot to a new location and restart. |
| The Robot is stuck | Move it to an open area and press the Power button to resume. Clear obstacles and open doors. |
| Unable to start: stuck in a Keep Out Zone | Move Robot out of the Keep Out Zone so it can start its new routine. |
| Unable to start: stairs or drop-off detected | Please move Robot to a new location and try again. |

| Error Indications | Solutions |
|---|---|
| Robot is suspended | The robot has detected that it is suspended in mid-air. Please move it to a new location and start again. |
| Battery too low to clean | Place Robot on its dock and allow it to charge sufficiently. You can check battery status here in the Robots tab. |
| Cleaning Tray full. Please check the dirty water pipe and confirm the Dirty Water Tank is properly installed | First, check and empty the Dirty Water Tank, ensuring it is installed in place. Then clean out hair and other blockages from the Dock's Cleaning Filter and Suction Inlet. |

# Robot Specifications

## Robot Sensor List

| Name | Quantity | Function | Detection Range / Working Distance |
|---|---|---|---|
| Navigation and Obstacle Avoidance Module | x1 | Localization, navigation & obstacle avoidance | Radar navigation 0.08 m-12 m Obstacle avoidance 0.05-3.2 m |
| IMU Gyroscope | x1 | Motion control | / |
| Accelerometer | x1 | Speed control | / |
| Side Single-line Laser Edge Sensor | x1 | Edge cleaning | 1.5 cm-10 cm |
| Ultrasonic Carpet Detection Sensor | x1 | Carpet recognition | 30 mm |
| Front Bumper Sensor | x2 | Collision protection | ≤3 mm |
| TOF Floor Detection Sensor | x1 | Cliff detection | 9 cm |
| Infrared Floor Detection Sensor | x2 | Cliff detection | 9 cm |
| Dust Bin Detection Hall Sensor | x1 | Detects if Dust Bin is installed | ≤1 cm |
| Rear Return Infrared Sensor | x1 | Return-to-Dock and pairing | 2-2.2 m |
| Dirty Water Container Detection Hall Sensor | x1 | Detects if Dirty Water Container is installed | ≤1 cm |
| Dirty Water Container Full Detection Hall Sensor | x1 | Detects if Dirty Water Container is full | <0.3 mm |

## Dock Sensor List

| Name | Quantity | Function | Detection Range / Working Distance |
|---|---|---|---|
| Clean Water Tank Detection Hall Sensor | x1 | Detects if Clean Water Tank is installed or empty | ≤1.5 cm |
| Dirty Water Tank Detection Hall Sensor | x1 | Detects if Dirty Water Tank is installed or full | ≤1.5 cm |
| Cleaning Tray Full Detection Hall Sensor | x1 | Detects if Cleaning Tray is full | ≤1.5 cm |
| Cleaning Tray Detection Hall Sensor | x1 | Detects if Cleaning Tray is installed | ≤1.5 cm |
| Cleaning Solution Shortage Detection | x1 | Detects if there is cleaning solution in the pipeline | / |

EN

EN

## Robot

| | |
|---|---|
| Product Name | Robot vacuum |
| Dimensions | 354.5×354.5×99.8 mm |
| Battery Capacity | Rated capacity 4800mAh<br>Nominal capacity 5200mAh |
| Net Weight | ~4.85 kg |

## Self-Cleaning Dock

| | |
|---|---|
| Dock Dimensions | 350×484×475 mm |
| Dock Net Weight | ~8.15kg |

# Technical Support

Need further assistance? Please let us help you.

Please download the Roomba® Home app, or visit **global.irobot.com** for product support. You may also contact your local service center. If you are in the United States or Canada and need further assistance, please call the U.S. Customer Care team at **(877) 855-8593**.

## iRobot® U.S. Customer Service Center Hours of Operation

Monday-Friday: 9:00 AM – 9:00 PM (EST)
Saturday-Sunday: 9:00 AM – 6:00 PM (EST)

## Safety Information

Please refer to the safety guide included with this product, or visit **global.irobot.com** for more information.

iRobot

©2026 iRobot Corporation. 8 Crosby Drive, Bedford, MA 01730 USA. All rights reserved. iRobot, Roomba, and PerfectEdge are registered trademarks of iRobot Corporation. AutoEmpty, AutoWash, StayClean, and PrecisionVision are trademarks of iRobot Corporation. Wi-Fi and the Wi-Fi logo are registered trademarks of Wi-Fi Alliance. Apple and App Store are trademarks of Apple Inc., registered in the U.S. and other countries. Google Play is a trademark of Google LLC.