TCL	TCL King Electrical Appliances(Huizhou) Co., Ltd. Product Certification Laboratory Address: Building F, No. 78, Huifeng 4th Road Zhongkai New and High-tech Industrial Development Zone Huizhou, Guangdong, China	Report No. NR26040104-S1

TEST REPORT

Applicant……..…..:	TCL KING ELECTRICAL APPLIANCES (HUIZHOU) CO., LTD
Address……..:	NO.78 4TH HUIFENG ROAD, ZHONGKAI NEW & HIGH-TECH INDUSTRIES DEVELOPMENT ZONE, HUIZHOU , GUANGDONG , CHINA
Manufacturer……..……..:	TCL KING ELECTRICAL APPLIANCES (HUIZHOU) CO., LTD
Address……..:	NO.78 4TH HUIFENG ROAD, ZHONGKAI NEW & HIGH-TECH INDUSTRIES DEVELOPMENT ZONE, HUIZHOU , GUANGDONG , CHINA
Factory……..……..……..:	1. TCL KING ELECTRICAL APPLIANCES (HUIZHOU) CO., LTD 2. TCL Operations Polska Sp. z o.o. 3. TCL SMART DEVICE(VIET NAM) COMPANY LIMITED 4. TATUNG MEXICO S.A DE C.V 5. TCL Photoelectric Technology (Chengdu) Co., Ltd
Address……..…..:	1. NO.78 4TH HUIFENG ROAD, ZHONGKAI NEW & HIGH-TECH INDUSTRIES DEVELOPMENT ZONE, HUIZHOU , GUANGDONG , CHINA 2. ul. A. Mickiewicza 31/41, 96-300 Żyrardów, Poland 3. No. 26 VSIP II-A, Street No. 32, VSIP IIA Industrial Park, Tan Binh, Bac Tan Uyen, Binh Duong, Vietnam 4. CALLE MIGUEL CATALAN # 420 PARQUE INDUSTRIAL RIO BRAVO, CD, JUAREZ, CHIH, MEX. C.P 32557, MEXICO. 5. Floor1, Floor2, Standardized Plant, No.2, Chengdu International Railway Port Comprehensive Bonded Zone, Bonded Building No.1533, Xiangdao Avenue, Qingbaijiang District, Chengdu City, China (Sichuan) Pilot Free Trade Zone, P.R.China.
Product name……..…..:	LCD Monitor
Trademark……..…..:	TCL & FFALCON & ROWA & iFFALCON

Model Name

25P1AD, 25P1ADXD, 25P1AD-UK, 25P1AD-UKXD, 25P1AD-1, 25P1AD-1XD, 25P1AD-1-UK, 25P1AD-1-UKXD, 25P1AD-2, 25P1AD-2XD, 25P1AD-UK, 25P1AD-UKXD, 25P1AD-A, 25P1AD-AXD, 25P1AD-A-UK, 25P1AD-A-UKXD, 25P1AD-B, 25P1AD-BXD, 25P1AD-B-UK, 25P1AD-B-UKXD, 25P1GMAD, 25P1GMADXD, 25P1GMAD-UK, 25P1GMAD-UKXD, 25P1GMAD-A, 25P1GMAD-AXD, 25P1GMAD-A-UK, 25P1GMAD-A-UKXD, 25P1BD, 25P1BDXD, 25P1BD-UK, 25P1BD-UKXD, 25P1BD-1, 25P1BD-1XD, 25P1BD-1-UK, 25P1BD-1-UKXD, 25P1BD-A, 25P1BD-AXD, 25P1BD-A-UK, 25P1BD-A-UKXD, 25P1GMBD, 25P1GMBDXD, 25P1GMBD-UK, 25P1GMBD-UKXD, **********25**********("*" can be A-Z, 0-9,"-" ,"+"or blank according to appearance, market, power cord's type, for marketing purpose, no technical difference)

Ratings…….:	Input: 20V⎓, 2.4A (Input rating of External power adapter: 100-240V~,50/60Hz, 1.3A)
Standard……..:	Eco design requirements acc. 2009/125/EC Commission Regulations (EU) 2019/2021 applicable for televisions, monitors and digital signage displays Acc. Commission Regulations (EU) 2017/1369 and addition Commission Regulations (EU) No 2019/2013 Energy labelling of televisions, monitors and digital signage displays Commission Regulation (EU) 2021/341 of 23 February 2021 Commission Delegated Regulation (EU) 2021/340 of 17 December 2020 EN 50564:2011 EN 50643:2018 EN 62087-3:2016
Date of Issue……..:	May 13, 2026
Testing Laboratory Name.:	TCL King Electrical Appliances(Huizhou) Co., Ltd. Product Certification Laboratory
Address / Testing Location…….....:	Building F, No. 78, Huifeng 4th Road Zhongkai New and High-tech Industrial Development Zone Huizhou, Guangdong, China
Test Result..……..:	PASS

This Test Report is Issued Under the Authority of:

Tested by	Checked by	Approved by
Wu Yong Wen 吴勇文	Cui Xiu Chun	Jiang Jun Jun

Test item Description

General Product Information:

Product type……..……...:	LCD Monitor
Panel type…….....:	LMF250NDHL
Main board……..……..……..……:	NT68293XL1
Power board…….....:	SAW48C-200-2400G
Visible screen area …….....:	5.437dm(H)*3.026dm(V) = 16.452 dm^2
Visible screen diagonal.....:	62.2cm/ 25inch
Size ratio……..…:	16:9
Resolution…….....:	1920*1080
Panel technology used….....:	☐ LCD ☒ LED LCD ☐ QLED LCD ☐ OLED ☐ MicroLED ☐ QDLED ☐ SED ☐ FED ☐ EPD ☐ OTHER
Image refresh frequency ……..:	280 Hz
Audio /Video Ports…….……..…:	☒ HDMI ☐ CI ☐ AV IN ☐ RF ☐ AUDIO IN ☐ Optical ☒ Earphone ☐ COAXIAL ☐ Other: USB
Is there ABC function…….…:	☐ With ☒ Without
ABC activated as default…….…:	☐ With ☒ Without
ABC sensor Installation angle……..…:	N/A
Is there voice recognition sensor available….:	☐ With ☒ Without
Is there room presence sensor available…….:	☐ With ☒ Without
Room presence sensor activated as default...:	☐ With ☒ Without
Is there force menu……...:	☐ With ☒ Without
Is EPS provided…….:	☒Yes ☐No
Is network television…….:	☐Yes ☒No
Is television with HiNA functionality.....:	☐Yes ☒No
Network port.....……..:	☐ Wired: 1pc / Ethernet port ☐ Wireless ☒ Not provided

Test Conditions

Ambient Temperature.....:	25.1℃
Relative Humidity.....:	59.2%
Test Voltage and Frequency…….…..:	230V/50Hz
Total harmonic distortion of the electricity supply system…..:	0.31%

Possible test case verdicts:

Test case does not apply to the test object .....:	N/A
Test item does meet the requirement .....:	P(ass)
Test item does not meet the requirement .....:	F(ail)

Testing

Date of receipt of test item: .....:	June 22, 2026
Date(s) of performance test: .....:	June 22, 2026

Remarks

All models in this report are identical except brand name, model designation and enclosure color. Unless otherwise specified, all the tests and construction inspection were conducted on model 25P1AD

1. Summary of Order of testing:

1). Setup UUT on a stand identifying location of ABC sensor where applicable and position display luminance and ambient light measuring instruments.

2). Run through initial setup confirming correct implementation of forced menu warnings and default settings of normal configuration.

3). Mute Audio where applicable.

4). Continue warm-up of sample while setting up test equipment and identifying peak white test pattern providing stable display luminance and power measurement.

5). If ABC is available, determine the illumination range and the ABC latency required for the sample.Profile the ABC of display luminance between 100 lux and 12 lux ambient light levels and measure on-mode power reduction between those limits.

6). Measure peak luminance in the normal configuration.

7). Measure the on-mode power using the SDR dynamic broadcast video sequence or HDR dynamic broadcast video sequences.

8). Measure the power requirement of low power and off modes and time the automatic power down functions.

2. Light source setup (if applicable):

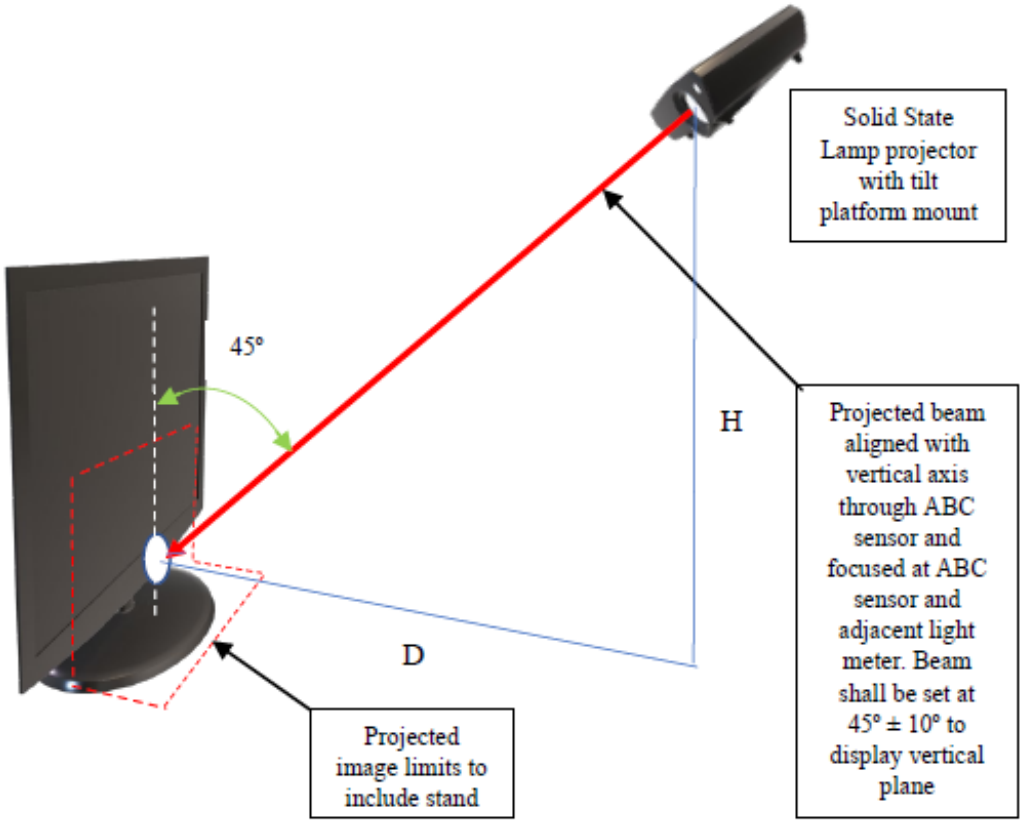

Figure 2 - Light source configuration

3. Requirements

3.1 EEI calculated equation: （Commission Regulation (EU) 2019/2021 of 1 October 2019）

$$EEI = \frac{(P_{measured} + 1)}{(3 \times [90 \times tanh(0,02 + 0,004 \times (A - 11)) + 4] + 3) + corr}$$

- A represents the screen area in dm^2

- $P_{measured}$ is the measured power in Watts in on mode in the normal configuration, in standard dynamic range (SDR)

- corr is a correction factor of 10 for OLED electronic displays that do not apply the ABC allowance in point B (1). This shall apply until 28 February 2023. corr shall be zero in all other cases.

EEI Limits for on-mode:

	EEI_{max} for electronic displays with resolution up to HD	EEI_{max} for electronic displays with resolution above HD and up to UHD	EEI_{max} for electronic displays with resolution above UHD and for MicroLED displays
1 March 2021	0,90	1,10	n.a.
1 March 2023	0,75	0,90	0,90'

3.2 EEI label calculated equation: （Commission Delegated Regulation (EU) 2019/2013 of 11 March 2019）

$$EEI_{label} = \frac{(P_{measured} + 1)}{(3 \times [90 \times tanh(0,025 + 0,0035 \times (A - 11)) + 4] + 3) + corr_l}$$

- A represents the viewing surface area in dm^2

- $P_{measured}$ is the measured power in on mode in Watts in the normal configuration and set as indicated in Table 2.

- $corr_l$ = is a correction factor set as indicated. (television / monitor =0, digital signage = 0.00062* (lum-500) * A)

Table 2

Measurement of $P_{measured}$

Dynamic Range level	$P_{measured}$
Standard Dynamic Range (SDR): $Pmeasured_{SDR}$	Power demand in Watts (W) in on mode, measured when displaying standardised test sequences of moving picture from dynamic broadcast content. Where allowances are applicable according to part C of this Annex, they should be deducted from $P_{measured}$.
High Dynamic Range (HDR) $Pmeasured_{HDR}$	Power demand in Watts (W) in on mode, measured as for $Pmeasured_{SDR}$ but with the HDR functionality activated by metadata in the standardised HDR test sequences. Where allowances are applicable according to part C of this Annex, they should be deducted from $P_{measured}$.

Electronic displays with automatic brightness control (ABC) shall qualify for a 10 % reduction in $P_{measured}$ if they meet all of the following requirements:

(a) ABC is enabled in the normal configuration of the electronic display and persists in any other standard dynamic range configuration available to the end user;

(b) the value of $P_{measured}$, in the normal configuration, is measured, with ABC disabled or if ABC cannot be disabled, in an ambient light condition of 100 lux measured at the ABC sensor;

(c) if applicable, the value of $P_{measured}$ with ABC disabled shall be equal to or greater than the on mode power measured with ABC enabled in an ambient light condition of 100 lux measured at the ABC sensor;

(d) with ABC enabled, the measured value of the on mode power must decrease by 20 % or more when the ambient light condition, measured at the ABC sensor, is reduced from 100 lux to 12 lux;

(e) the ABC control of the display screen luminance meets all of the following characteristics when the ambient light condition measured at the ABC sensor changes:

- the measured screen luminance at 60 lux is between 65 % and 95 % of the screen luminance measured at 100 lux;
- the measured screen luminance at 35 lux is between 50 % and 80 % of the screen luminance measured at 100 lux;
- the measured screen luminance at 12 lux is between 35 % and 70 % of the screen luminance measured at 100 lux.

3.3 Energy efficiency classes：

Energy efficiency Class	Energy Efficiency Index(EEI_{label})
A	EEI_{label}<0.30
B	0.30 ≤EEI_{label}<0.40
C	0.40 ≤EEI_{label}<0.50
D	0.50 ≤EEI_{label}<0.60
E	0.60 ≤EEI_{label}<0.75
F	0.75 ≤EEI_{label}<0.90
G	0.90 ≤EEI_{label}

3.4 Power demand limits other than on-mode

Electronic displays shall not exceed power demand limits in the different modes and conditions listed in Table 3.

Table 3

power demand limits other than on-mode, in Watts

	Off mode	Standby mode	Networked standby mode
Maximum limits	0,30	0,50	2,00
Allowances for additional functions when present and enabled			
Status display	0,0	0,20	0,20
Deactivation using room presence detection	0,0	0,50	0,50
Touch functionality, if usable for activation	0,0	1,00	1,00
HiNA function	0,0	0,0	4,00
Total maximum power demand with all additional functions when present and enabled	*0,30*	*2,20*	*7,70*

4. Test result

Commission Regulation (EU) 2019/2021 of 1 October 2019			
Clause	Item	Result - Remark	Verdict
Annex II	Eco design requirements		P
1	Energy efficiency index limits for on-mode $EEI = \frac{(P_{measured} + 1)}{(3 \times [90 \times tanh(0,02 + 0,004 \times (A - 11)) + 4] + 3) + corr}$	EEI=0.628	P
1.1	From 1 march 2021		N/A
	- Resolution up to HD. EEI limits: 0.9	EEI=0.628	P
	- Resolution above HD and up to UHD. EEI limits: 1.10		N/A
	- Resolution above UHD and for MicroLED displays. EEI limits: n.a.		N/A
1.2	From 1 march 2023		N/A
	- Resolution up to HD. EEI limits: 0.75	EEI=0.628	P
	- Resolution above HD and up to UHD. EEI limits: 0.90		N/A
	- Resolution above UHD and for MicroLED displays. EEI limits: 0.90		N/A
1.3	Televisions with automatic brightness control (ABC)	No such function	N/A
	Televisions qualify for a 10 % reduction in $P_{measured}$, if they meet all of the following requirements.	10 % reduction in $P_{measured}$:/	N/A
1.3.1	ABC is enabled in the normal configuration of the televisions and persists in any other standard dynamic range configuration available to the end-user.		N/A
1.3.2	The value of $P_{measured}$, in the normal configuration, is measured with ABC disabled or, if ABC cannot be disabled, in an ambient light condition of 100 lux measured at the ABC sensor.	$P_{measured}$ (ABC disabled): /	N/A
1.3.3	The value of $P_{measured}$ with ABC disabled, if applicable, shall be equal to or greater than the on mode power measured with ABC enabled in an ambient light condition of 100 lux measured at the ABC sensor.	$P_{measured}$ (ABC disabled): / $P_{measured}$ (100 lux): /	N/A
1.3.4	With ABC enabled, the measured value of the on mode power must decrease by 20 % or more when the ambient light condition, measured at the ABC sensor, is reduced from 100 lux to 12 lux.	$P_{measured}$ (100 lux):/ $P_{measured}$ (12 lux):/ Decrease: /	N/A
1.3.5	the ABC control of the display screen luminance meets all of the following characteristics when the ambient light condition measured at the ABC sensor changes		N/A
	- the measured screen luminance at 60 lux is between 65 % and 95 % of the screen luminance measured at 100 lux	100 lux luminance: / 60 lux luminance: / Percentage: /	N/A

Commission Regulation (EU) 2019/2021 of 1 October 2019			
Clause	Item	Result - Remark	Verdict
	- the measured screen luminance at 35 lux is between 50 % and 80 % of the screen luminance measured at 100 lux	100 lux luminance:/ 35 lux luminance: / Percentage: /	N/A
	- the measured screen luminance at 12 lux is between 35 % and 70 % of the screen luminance measured at 100 lux	100 lux luminance: / 12 lux luminance: / Percentage: /	N/A
2	Forced menu and set up menus		P
2.1	Televisions with a forced menu on initial activation proposing.		N/A
	- Where a forced menu is provided, the normal configuration shall be set as default choice, otherwise the normal configuration shall be the out-of-the-box setting.		N/A
2.2	If the user selects a configuration other than the normal configuration and this configuration results in a higher power demand than the normal configuration, a warning message about the likely increase in energy use shall appear and confirmation of the action shall be explicitly requested	Warning message: If this setting is changed, power consumption may increase. Do you want to continue to change?	P
2.3	If the user selects a setting other than those that are part of the normal configuration and this setting results in a higher energy consumption than the normal configuration, a warning message about the likely increase in energy consumption shall appear and confirmation of the action explicitly requested.	Warning message: If this setting is changed, power consumption may increase. Do you want to continue to change?	P
2.4	A change by the user in a single parameter in any setting shall not trigger any change in any other energy-relevant parameter, unless unavoidable. In such a case a warning message shall appear about the change of other parameters and the confirmation of the change shall be explicitly requested.		P
3	Peak white luminance ratio		P
3.1	In the normal configuration, Televisions peak white luminance shall not be less than 220 cd/m^2.	/	N/A
	- If the electronic display is primarily intended for close viewing by a single user, not less than 150 cd/m^2.	Luminance: 148.6 cd/m^2	N/A
3.2	If the peak white luminance in the normal configuration is set to lower values, Peak luminance ratio it shall not be less than 65%.	Peak luminance ratio : 78.7%	P
4	Off mode, Standby and Networked standby mode Requirements		P
4.1	Power demand limits other than on-mode.		P
4.1.1	Off mode		P
	- Maximum limits:0.3W	0.135W	P
4.1.2	Standby		P
	- Status display	☐ With ☒ Without	N/A
	- Deactivation using room presence detection	☐ With ☒ Without	N/A

Commission Regulation (EU) 2019/2021 of 1 October 2019			
Clause	Item	Result - Remark	Verdict
	- Touch functionality, if usable for activation	☐ With(inactivation) ☐ Without	N/A
	- Without additional function, limits:0.5W	Measured: 0.227W	P
	- With all additional functions, limits:2.2W		N/A
4.1.3	Networked standby		N/A
	- Status display	☐ With ☒ Without	N/A
	- Deactivation using room presence detection	☐ With ☒ Without	N/A
	- Touch functionality, if usable for activation	☐ With ☒ Without	N/A
	- HiNA function	☐ With ☒ Without	N/A
	- Without additional function, limits:2.0W		N/A
	- With all additional functions, limits:7.7W		N/A
4.2	Availability of off, standby and networked standby modes		P
4.2.1	Electronic displays shall provide off mode or standby mode or a networked standby mode or other modes which do not exceed the applicable power demand requirements for standby mode.	Electronic displays provide off mode and standby standby	P
4.2.2	The configuration menu, instruction manuals and other documentation, if any, shall refer to off mode, standby mode or networked standby mode using those terms.		P
4.2.3	Automatic switch to off mode and/or standby mode and/or another mode which does not exceed the applicable power demand requirements for standby mode shall be set as default, including for networked displays where the network interface is enabled when in on mode.		P
4.2.4	Networked standby mode shall be disabled in normal configuration of a networked television. The end user shall be prompted to confirm the activation of networked standby, if it is needed for a chosen remotely activated function, and must be able to disable it.		N/A
4.2.5	Networked electronic displays shall comply with the requirements for standby mode when networked standby mode is disabled.		N/A
5	Automatic standby in televisions		N/A
5.1	After no more than 4 hours in on mode following the last user interaction and/or a channel change, the television shall be automatically switched from on mode to standby mode or networked standby mode or another mode.		N/A

Commission Regulation (EU) 2019/2021 of 1 October 2019			
Clause	Item	Result - Remark	Verdict
	- Before such automatic switch, televisions shall show, for at least 20 seconds, with possibility of delaying or temporarily cancelling it		N/A
5.2	If the television provides a function allowing the user to shorten, extend or disable the 4-hour period for automatic mode transitions detailed in 5.1, a warning message shall appear about a potential increase in energy use and a confirmation of the new setting must be requested when an extension beyond the 4-hour period or disabling is selected.		N/A
5.3	If the television is equipped with a room presence sensor, the automatic transition from on mode into standby applies if no presence is detected for no more than 1 hour.		N/A
5.4	Televisions with various selectable input sources shall prioritise the power management protocols of the signal source selected and displayed over those default power management mechanisms described in the paragraphs (5.1) to (5.3) above.		N/A
6	Automatic standby in displays other than televisions		P
6.1	Electronic displays other than televisions, with various selectable input sources shall switch, as configured in the normal configuration, into standby mode, networked standby mode or another mode which does not exceed the applicable power demand requirements respectively for standby or networked standby mode when no input is detected by any input source for over 10 seconds and, for digital interactive whiteboards and for broadcast displays, for over 60 minutes.		P
6.2	Before triggering such a switch, a warning message shall be displayed and the switch completed within 10 minutes.		P
7	Material efficiency requirements		P
7.1	Design for dismantling, recycling and recovery		P
7.1.1	Manufacturers, importers or their authorised representatives shall ensure that joining, fastening or sealing techniques do not prevent the removal, using commonly available tools, of the components indicated in point 1 of Annex VII of Directive 2012/19/EU on WEEE or in Article 11 of Directive 2006/66/EC of the European Parliament and of the Council (1) on batteries and accumulators and waste batteries and accumulators, when present.		P
7.1.2	Manufacturers, importers or their authorised representatives shall, without prejudice to point 1 of Article 15 of Directive 2012/19/EU, make available, on a free-access website, the dismantling information needed to access any of the products components referred to in point 1 of Annex VII of Directive 2012/19/EU.		P
7.1.3	This dismantling information shall include the sequence of dismantling steps, tools or technologies needed to access the targeted components.		P

Commission Regulation (EU) 2019/2021 of 1 October 2019			
Clause	Item	Result - Remark	Verdict
7.1.4	The end of life information shall be available until at least 15 years after the placing on the market of the last unit of a product model.		P
7.2	Marking of plastic components		P
	Plastic components heavier than 50 g		--
7.2.1	Shall be marked by specifying the type of polymer with the appropriate standard symbols or abbreviated terms set between the punctuation marks > and < as specified in available standards. The marking shall be legible.		P
7.2.2	Components containing flame retardants shall additionally be marked with the abbreviated term of the polymer followed by hyphen, then the symbol FR followed by the code number of the flame retardant in parentheses. The marking on the enclosure and stand components shall be clearly visible and readable.		P
7.3	Cadmium logo		P
	Concentration values of Cadmium (Cd) by weight in homogeneous materials exceed 0,01 % as defined in Directive 2011/65/EU on the restriction of the use of certain hazardous substances in electrical and electronic equipment, shall be labelled with the Cadmium inside logo.	Cadmium free	P
7.4	Halogenated flame retardants		P
	The use of halogenated flame retardants is not allowed in the enclosure and stand of electronic displays.		P
8	Information availability requirements		P
	The product manufacturer, importer or authorised representative shall make available the information set out below when placing on the market the first unit of a model or of an equivalent model.		P
	The information shall be provided free of charge to third parties dealing with professional repair and reuse of electronic displays (including third party maintenance actors, brokers and spare parts providers).		P
8.1	Availability of software and firmware updates		P
	The latest available version of the firmware shall be made available for a minimum period of eight years after the placing on the market of the last unit of a certain product model, free of charge or at a fair, transparent and non-discriminatory cost. The latest available security update to the firmware shall be made available until at least eight years after the placing on the market of the last product of a certain product model, free of charge.		P
	Information on the minimum guaranteed availability of software and firmware updates, availability of spare parts and product support shall be indicated in the product information sheet as from Annex V of Regulation (EU) 2019/2013.		P

Test summary

1. Power Measurements				
Test mode	Description how the appliance mode was selected or programmed	Average Power	Requirement	Verdict
Off	Use the power switch	0.135W	Limit ≤ 0.3W	P
Networked standby	/	/	Limit ≤ 2.0W	N/A
Standby mode	Use the standby button	0.227W	Limit ≤ 0.5W	P
$P_{measured\ SDR}$ (No ABC)	HDMI	15.5W	/	/
$P_{measured\ SDR}$ (ABC disabled)	/	/	/	/
$P_{measured\ SDR}$ (ABC enabled at 100 lux)	/	/	Requirement: ≤ $P_{measured\ SDR}$ (ABC disabled)	/
$P_{measured\ SDR}$ (ABC enabled at 12 lux)	/	/	Requirement: ≤ 0.8*$P_{measured\ SDR}$ (100 lux)	/
P_{av} HDR10	HDMI	37.9W	/	/
P_{av} HLG	/	/	/	N/A
$P_{measured\ HDR}$ = P_{av} HDR10	/	37.9W	/	/
P_SDR	/	15.5kWh/1000h	/	/
P_HDR	/	37.9kWh/1000h	/	/

Remark:
Video in HDMI 1 (dynamic broadcast-content signal)
Power consumption measured in SDR/HDR(Only the HDR10 format is supported) mode.
Precondition and measurement: Off-mode for minimum 1 hour followed by 1 hour On-mode and measuring (SDR for 10 min, HDR for 5 min) immediately afterwards.
P_SDR is the on mode energy consumption in kWh per 1000 h, when playing SDR content.
P_HDR is the on mode energy consumption in kWh per 1000 h, when playing HDR content.

2. Peak White Luminance Measurement					
Luminance test pattern:	VESA L20	Normal configuration	Standard	Luminance of the normal configuration (cd/m²):	148.6
Brightest pre-set configuration	RPG	Luminance of brightest pre-set configuration (cd/m²)	188.8	Luminance ratio (min. 65%)	78.7%
Mode	Description how the appliance mode was selected or programmed		Measured	Limit	Verdict
Peak luminance	Video in HDMI 1 (VESA L20)		148.6 cd/m²	Min:150 cd/m²	N/A
Peak luminance ratio	/		78.7%	Min. 65%	P

3. Display luminance measurements			
Ambient light	Luminance (cd/m^2)	Percentage	Requirement:
100 lux	/	/	/
60 lux	/	/	Between 65 % and 95 % of the luminance at 100 lux.
35 lux	/	/	Requirement: between 50 % and 80 % of the luminance at 100 lux.
12 lux	/	/	Requirement: between 35 % and 70 % of the luminance at 100 lux.

4. EEI and EEI $_{label}$ Calculated value			
EEI	0.628	EEI Limits	0.75
EEI $_{label}$ (SDR)	0.614	Energy Efficiency Class (SDR)	E
EEI $_{label}$ (HDR)	1.446	Energy Efficiency Class (HDR)	G

5. Automatic standby	
APD time and alert message	APD time: 10 seconds Alert message display time: 10 seconds Alert message: Please check your signal connection.

6. ANNEX VI (9) Additional information requirements （Commission Delegated Regulation (EU) 2019/2013 of 11 March 2019）			
Clause	Item	Result - Remark	Verdict
ANNEX VI	Additional information		P
1	Input terminal for the audio and video test signals used for testing	HDMI 1	--
2	Information and documentation on the instrumentation	See appended table 2	P
3	For on mode		--
	- The characteristics of the dynamic broadcast-content video signal representing typical broadcast TV content; for the HDR dynamic broadcast content video signal the electronic display must be automatically switched to HDR mode by the HDR metadata of that signal.	Play the dynamic broadcast-content video signal in HDR10 and HLG formats, check if the Monitor display both formats correctly.	P
	- Precondition and measurement	Off-mode for minimum 1 hour followed by 1 hour On-mode and measuring (SDR for 10 min, HDR for 5 min) immediately afterwards.	P
	- The picture settings used for the brightest peak white luminance measurement	RPG	--
	- The pattern for the brightest peak white luminance measurement	VESA L20	--

4	For standby and off mode		--
	- The measurement method used	See appended Figure 1	P
	- How the mode was selected or programmed	Standby mode was selected by means of panel button	P
	- Sequence of events to reach the condition where the electronic display automatically changes mode.	For APD function	P
5	For electronic displays with a designated computer signal interface		P
6	For the networked electronic displays only		N/A
	- Number and type of network interfaces and, except for wireless network interfaces, their position in the electronic display.	No network interfaces	N/A
	- Whether the electronic display qualifies as electronic display with HiNA functionality	No HiNA functionality	N/A
	- Information whether networked electronic display provides functionality allowing the power management function and/or the end-user to switch the electronic display being in a condition providing networked standby into standby mode, or off mode or another condition which does not exceed the applicable power demand requirements for off mode and/or standby mode including enhanced reactivation function power allowance where applicable.	No such functionality	N/A
7	For each type of network port		N/A
	- The default time after which the power management function, switches the display into a condition providing networked standby; and		N/A
	- The trigger to be used to reactivate the electronic display		N/A

Figure 1: For standby and off mode measurement method

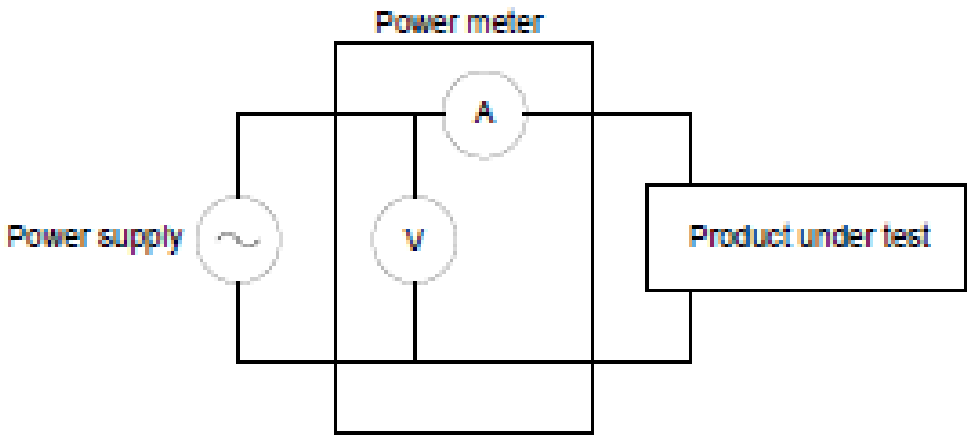

Table 1: Technical parameters of the model and declared values

Clause	Parameter	Parameter value and precision	Unit	Declared value
General				
1	Supplier's name or trade mark	See the first page of the report		
2	Model identifier	See the first page of the report		
3	Energy efficiency class for Standard Dynamic Range (SDR)	E	A-G	E
4	On mode power demand in Standard Dynamic Range (SDR)	15.5	W	18
5	Energy efficiency class for High Dynamic Range (HDR), if implemented	G	A-G	G
6	On mode power demand in High Dynamic Range (HDR)	37.9	W	45
7	Off mode, power demand	0.135	W	0.3
8	Standby mode power demand	0.227	W	0.5
9	Networked standby mode power demand	/	W	/
10	Electronic display category	LCD Monitor	/	/
11	Size ratio	16:9	/	/
12	Screen resolution (pixels)	1920 x 1080	/	/
13	Screen diagonal	62.2	cm	62
14	Screen diagonal	25	inches	25
15	Visible screen area	16.452	dm^2	/
16	Panel technology used	LED LCD	/	/
17	Automatic Brightness Control (ABC) available	No	/	/
18	Voice recognition sensor available	No	/	/
19	Room presence sensor available	No	/	/
20	Image refresh frequency rate (normal configuration)	280	Hz	/
21	Minimum guaranteed availability of software and firmware updates (from the date of end of the placement on the market (as set out in Annex II E, point 1 of Commission Regulation (EU) 2019/2021):	8	Years	8
22	Minimum guaranteed availability of spare parts (from the date of end of the placement on the market, as set out in Annex II E, point 1 of Commission Regulation (EU) 2019/2021):	8	Years	8

23	Minimum guaranteed product support (from the date of end of the placement on the market, as set out Annex II E, point 1 of Commission Regulation (EU) 2019/2021):	8	Years	8
	Minimum duration of the general guarantee offered by the supplier	2	Years	2
For On-mode				
24	Peak white luminance of the brightest on mode configuration	188.8	cd/m^2	N/A
25	Peak white luminance of the normal configuration	148.6	cd/m^2	N/A
26	Peak white luminance ratio (calculated as value of “Peak white luminance of the normal configuration” divided by value of “Peak white luminance of the brightest on mode configuration” multiplied by 100)	78.7	%	Min: 65%
For Auto Power Down (APD)				
27	Length of time in on mode before the electronic display automatically switches to standby, off mode, or another condition which does not exceed the applicable power demand requirements for off mode or standby mode.	00:10	mm:ss	00:10
28	For televisions: the length of time, following the last user interaction, before the television automatically switches to standby, off- mode, or another condition which does not exceed the applicable power consumption requirements for off-mode or standby- mode;	N/A	mm:ss	N/A
29	For televisions equipped with room presence sensor: the length of time, when no presence is detected, before the television automatically switches to standby, off- mode, or another condition which does not exceed the applicable power demand requirements for off mode or standby mode;	N/A	mm:ss	N/A
30	For electronic displays other than televisions and broadcast displays: the length of time, when no input is detected, before the electronic display automatically switches to standby, off-mode, or another condition which does not exceed the applicable power consumption requirements for off mode or standby mode;	00:10	mm:ss	00:10
For ABC If available and activated by default				
31	Percentage of power reduction due to ABC action between the 100 lux and 12 lux ambient light conditions.	N/A	%	/
32	On mode power at 100 lux ambient light at the ABC sensor	N/A	W	/
33	On mode power at 12 lux ambient light at the ABC sensor	N/A	W	/
34	Screen luminance at 100 lux ambient light at the ABC sensor	N/A	cd/m^2	/
35	Screen luminance at 60 lux ambient light at the ABC sensor	N/A	cd/m^2	/
36	Screen luminance at 35 lux ambient light at the ABC sensor	N/A	cd/m^2	/

37	Screen luminance at 12 lux ambient light at the ABC sensor	N/A	cd/m^2	N/A
For Power Supply				
38	Power supply type	External	/	/
39	Standard references (if relevant)		/	/
40	Input voltage	100-240~	V	/
41	Output voltage	20⎓	V	/
42	Input current (max)	1.3	A	/
43	Output current (min)	/	A	/

Table 2: Test Equipment List

Equipment Name	Model No.	Manufacturer	Specification	Serial No.	Cal. Date	Next. Cal.
AC Power Source	APW-1200N	Zhongke Optoelectronics	300V/150V, 50Hz/60Hz/ 40-499.9Hz	20230214002	2026.03.10	2027.03.09
Digital Power Meter	WT310E	YOKOGAMA	600V/20A/12KW	C3ZC09002E	2026.03.10	2027.03.09
Thermo-Hygrometer	SE580-EX	HUATO	RH40%-80%, 15℃-30℃	HT20154610	2025.06.24	2026.06.23
Digital Power Meter	PW3335	HIOKI	600V/20A/12KW	160723647	2026.03.10	2027.03.09
Luminance Meter	CS-200	KONICA	20000cd/m^2	1004921	2026.06.10	2027.06.09
Digital lux meter	T-10A	KONICA	0-299900 lux	30022168	2026.03.11	2027.03.10
Laser range finder	DLE50	BOSCH	0-50m	203461457	2026.06.07	2027.06.06
DVD player	UBP-X700	SONY	HDR/4K	4008287	/	/

Photo documentation:

Photo 1: Front view of model

Photo 2: Back view of model

Photo 3: Rating label representative

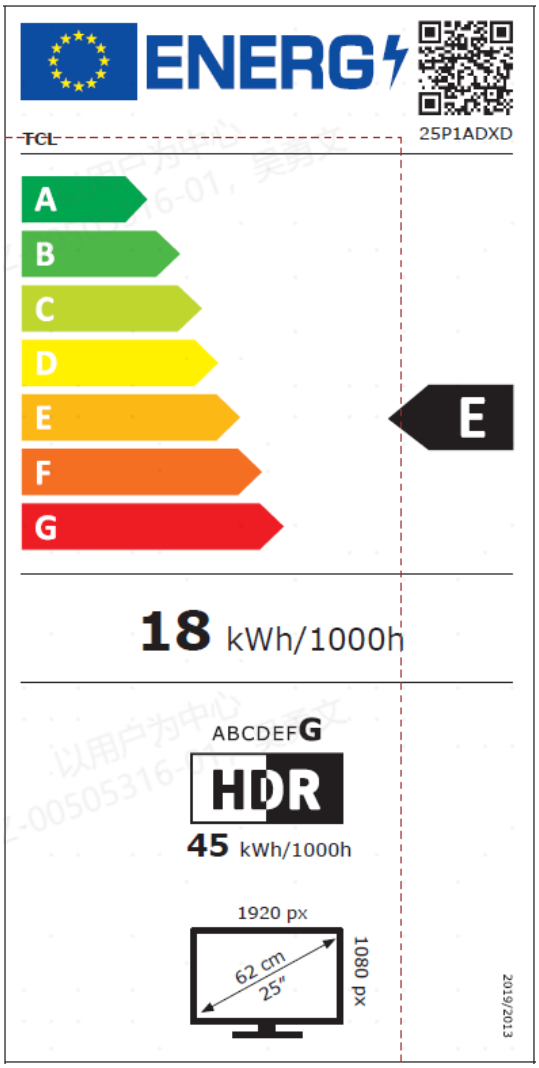

Photo 4: Energy label representative

Attachment 1: Product Information Sheet

Product Information Sheet

COMMISSION DELEGATED REGULATION (EU) 2019/2013 with regard to energy labelling of electronic displays

			Parameter value and precision			**Unit**
	Parameter					
1.	Supplier name or trade mark		TCL			
2.	Model identifier		See the first page of the report			
3.	Energy efficiency class for standard Dynamic Range (SDR)		E			
4.	On mode power demand in Standard Dynamic Range (SDR)		18.0			W
5.	Energy efficiency class (HDR)		G			
6.	On mode power demand in High Dynamic Range (HDR), if implemented		45.0			W
7.	Off mode, power demand, if applicable		n.a.			W
8.	Standby mode power demand, if applicable		0.5			W
9.	Networked standby mode power demand, if applicable		2.0			W
10.	Electronic display category		Television			
11.	Size ratio		16	:	9	integer
12.	Screen resolution		1920	x	1080	pixels
13.	Screen diagonal		62.2			cm
14.	Screen diagonal		25			inches
15.	Visible screen area		16.5			dm²
16.	Panel technology used		LED LCD			
17.	Automatic Brightness Control (ABC) available		No			
18.	Voice recognition sensor available		No			
19.	Room presence sensor available		No			
20.	Image refresh frequency rate (default)		280			Hz
21.	Minimum guaranteed availability of software and firmware updates (from the date of end of the placement on the market)		8			Years
22.	Minimum guaranteed availability of spare parts (from the date of end of the placement on the market)		8			Years
23.	Minimum guaranteed product support		8			Years
	Minimum duration of the general guarantee offered by the supplier		2			Years
24.	Power supply type:		External			
25.	External power supply (non-standardised and included in the product box)					
	i					Text
	ii	Input voltage	100-240			V
	iii	Output voltage	20⎓			V
26.	External standardised power supply (or suitable one if not included in the product box)					
	i	Supported standard name or list				
	ii	Required output voltage	n.a.			V
	iii	Required delivered current (minimum)	n.a.			A
	iv	Required current frequency	n.a.			Hz

End report