AEG

aeg.com/register



**NKM5N401B**

**TM5NK401B**

**EN** User Manual | **Compact Microwave Oven Connected**

# INSTALLATION

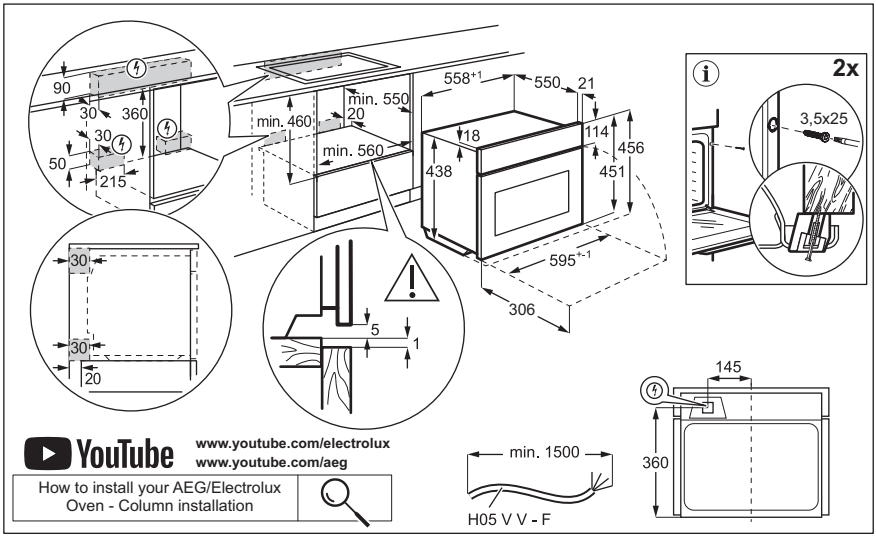


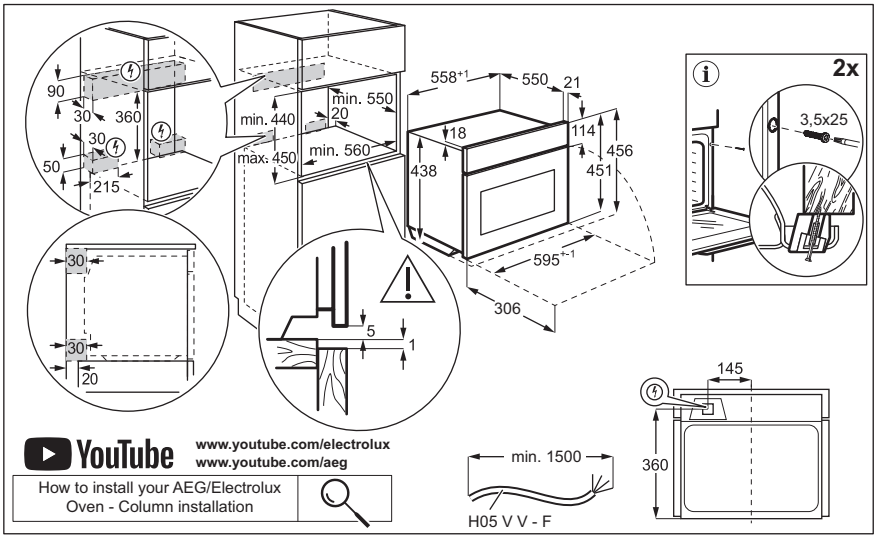

**Welcome to AEG! Thank you for choosing our appliance.**

Get usage advice, brochures, troubleshooting, service and repair information:
**www.aeg.com/support**

Subject to change without notice.

## CONTENTS


**1.** SAFETY INFORMATION..... 3
**2.** SAFETY INSTRUCTIONS..... 6
**3.** PRODUCT DESCRIPTION..... 8
**4.** CONTROL PANEL..... 8
**5.** BEFORE FIRST USE..... 9
**6.** DAILY USE..... 10
**7.** ADDITIONAL FUNCTIONS..... 12
**8.** CLOCK FUNCTIONS..... 13
**9.** USING THE ACCESSORIES..... 14
**10.** HINTS AND TIPS..... 14
**11.** CARE AND CLEANING..... 17
**12.** TROUBLESHOOTING..... 18
**13.** ENERGY EFFICIENCY..... 19
**14.** ENVIRONMENTAL CONCERNS..... 19


# 1. ⚠ SAFETY INFORMATION

Before the installation and use of the appliance, carefully read the supplied instructions. The manufacturer is not responsible for any injuries or damage that are the result of incorrect installation or usage. Always keep the instructions in a safe and accessible location for future reference.

## 1.1 Children and vulnerable people safety

- This appliance can be used by children aged from 8 years and above and persons with reduced physical, sensory or mental capabilities or lack of experience and knowledge if they have been given supervision or instruction concerning the use of the appliance in a safe way and understand the hazards involved. Children of less than 8 years of age and persons with very extensive and complex disabilities shall be kept away from the appliance unless continuously supervised.

- Children should be supervised to ensure that they do not play with the appliance and mobile devices with the app.
- Keep all packaging away from children and dispose of it appropriately.
- WARNING: The appliance and its accessible parts become hot during use. Keep children and pets away from the appliance when in use and when cooling down.
- If the appliance has a child safety device, it should be activated.
- Children shall not carry out cleaning and user maintenance of the appliance without supervision.

## 1.2 General Safety

- This appliance is for cooking purposes only.
- This appliance is designed for single household domestic use in an indoor environment.
- This appliance may be used in offices, hotel guest rooms, bed & breakfast guest rooms, farm guest houses and other similar accommodation where such use does not exceed (average) domestic usage levels.
- Only a qualified person must install this appliance and replace the cable.
- Do not use the appliance before installing it in the built-in structure.
- Disconnect the appliance from the power supply before carrying out any maintenance.
- If the supply cord is damaged, it must be replaced by the manufacturer, its Authorised Service Centre or similarly qualified persons to avoid an electrical hazard.
- WARNING: Ensure that the appliance is switched off before replacing the lamp to avoid the possibility of electric shock.
- WARNING: The appliance and its accessible parts become hot during use. Care should be taken to avoid touching heating elements or the surface of the appliance cavity.
- Always use oven gloves to remove or insert accessories or ovenware.

- Use only the turntable and the turntable support designed for this appliance.
- Do not activate the microwave function when the appliance is empty. Metal parts inside the cavity can create electric arcing.
- Metallic containers for food and beverages are not allowed during microwave cooking. This requirement is not applicable if the manufacturer specifies size and shape of metallic containers suitable for microwave cooking.
- WARNING: If the door or door seals are damaged, the appliance must not be operated until it has been repaired by a qualified person.
- WARNING: Only a qualified person can carry out any service or repair operation that involves the removal of a cover which gives protection against exposure to microwave energy.
- WARNING: Do not heat liquids and other foods in sealed containers. They are liable to explode.
- Use only utensils that are suitable for use in microwave ovens.
- When heating food in plastic or paper containers, observe the appliance due to the possibility of ignition.
- The appliance is intended for heating food and beverages. Drying of food or clothing and heating of warming pads, slippers, sponges, damp cloth and similar may lead to risk of injury, ignition or fire.
- If smoke is emitted, switch off or unplug the appliance and keep the door closed in order to stifle any flames.
- Microwave heating of beverages can result in delayed eruptive boiling. Care must be taken when handling the container.
- The contents of feeding bottles and baby food jars shall be stirred or shaken and the temperature checked before consumption, in order to avoid burns.

- Eggs in their shell and whole hard-boiled eggs should not be heated in the appliance since they may explode, even after microwave heating has ended.
- The appliance should be cleaned regularly and any food deposits removed.
- Do not use a steam cleaner to clean the appliance.
- Do not use harsh abrasive cleaners or sharp metal scrapers to clean the glass door since they can scratch the surface, which may result in shattering of the glass.
- Failure to maintain the appliance in a clean condition could lead to deterioration of the surface that could adversely affect the life of the appliance and possibly result in a hazardous situation.

## **2.** SAFETY INSTRUCTIONS

### 2.1 Installation

⚠ **WARNING!**

Only a qualified person must install this appliance.

- Remove all the packaging.
- Do not install or use a damaged appliance.
- Follow the installation instructions available on our website.
- Always take care when moving the appliance as it is heavy. Always use safety gloves and enclosed footwear.
- Do not pull the appliance by the handle.
- Install the appliance in a safe and suitable place that meets installation requirements.
- Keep the minimum distance from other appliances and units.
- Before mounting the appliance, check if the appliance door opens without restraint.
- The appliance is equipped with an electric cooling system. It must be operated with the electric power supply.

### 2.2 Electrical connection

⚠ **WARNING!**

Risk of fire and electric shock.

- All electrical connections should be made by a qualified electrician.
- The appliance must be earthed.
- Make sure that the parameters on the rating plate are compatible with the electrical ratings of the mains power supply.
- Always use a correctly installed shockproof socket.
- Do not use multi-plug adapters and extension cables.
- Make sure not to cause damage to the mains plug and to the mains cable. Should the mains cable need to be replaced, this must be carried out by our Authorised Service Centre.
- Do not let mains cables touch or come near the appliance door or the niche below the appliance, especially when it operates or the door is hot.
- The shock protection of live and insulated parts must be fastened in such a way that it cannot be removed without tools.
- Connect the mains plug to the mains socket only at the end of the installation.

Make sure that there is access to the mains plug after the installation.
- If the mains socket is loose, do not connect the mains plug.
- Do not pull the mains cable to disconnect the appliance. Always pull the mains plug.
- Use only correct isolation devices: line protecting cut-outs, fuses (screw type fuses removed from the holder), earth leakage trips and contactors.
- The electrical installation must have an isolation device which lets you disconnect the appliance from the mains at all poles. The isolation device must have a contact opening width of minimum 3 mm.
- This appliance is supplied with a main plug and a main cable.

## 2.3 Use

**⚠ WARNING!**

Risk of injury, burns and electric shock or explosion.

- Do not change the specification of this appliance.
- Make sure that the ventilation openings are not blocked.
- Do not let the appliance stay unattended during operation.
- Deactivate the appliance after each use.
- Be careful when you open the appliance door while the appliance is in operation. Hot air can release.
- Do not operate the appliance with wet hands or when it has contact with water.
- Do not apply pressure on the open door.
- Do not use the appliance as a work surface or as a storage surface.
- Open the appliance door carefully. The use of ingredients with alcohol can cause a mixture of alcohol and air.
- Do not let sparks or open flames to come in contact with the appliance when you open the door.
- Do not put flammable products or items that are wet with flammable products in, near or on the appliance.
- Do not share your Wi-Fi password.
- Do not use microwave function to preheat the appliance.

**⚠ WARNING!**

Risk of damage to the appliance.

- To prevent damage or discoloration to the enamel:
  - do not put aluminium foil directly on the bottom of cavity of the appliance.
  - do not put water directly into the hot appliance.
  - do not keep moist dishes and food in the appliance after you finish the cooking.
  - be careful when you remove or install the accessories.
- Discoloration of the enamel or stainless steel has no effect on the performance of the appliance.
- Use only accessories supplied with this appliance or recommended by the manufacturer.
- Always cook with the appliance door closed.
- If the appliance is installed behind a furniture panel (e.g. a door) make sure the door is never closed when the appliance operates. Heat and moisture can build up behind a closed furniture panel and cause subsequent damage to the appliance, the housing unit or the floor. Do not close the furniture panel until the appliance has cooled down completely after use.

## 2.4 Care and cleaning

**⚠ WARNING!**

Risk of injury, fire, or damage to the appliance.

- Before maintenance, deactivate the appliance and disconnect the mains plug from the mains socket.
- Make sure the appliance is cold. There is the risk that the glass panels can break.
- Replace immediately the door glass panels when they are damaged. Contact the Authorised Service Centre.
- Make sure the cavity, the turntable and the door are wiped dry after each use. Steam produced during the operation of the appliance condensates on cavity walls and can cause corrosion.

- Clean regularly the appliance to prevent the deterioration of the surface material.
- Fat and food remaining in the appliance can cause fire and electric arcing when the microwave function operates.
- Clean the appliance with a moist soft cloth. Use only neutral detergents. Do not use abrasive products, abrasive cleaning pads, solvents or metal objects.
- If you use an oven spray, follow the safety instructions on its packaging.

### 2.5 Internal lighting

**⚠ WARNING!**

Risk of electric shock.

- Concerning the lamp(s) inside this product and spare part lamps sold separately: These lamps are intended to withstand extreme physical conditions in household appliances, such as temperature, vibration, humidity, or are intended to signal information about the operational status of the appliance. They are not intended to be used in other applications and are not suitable for household room illumination.
- This product contains a light source of energy efficiency class G.
- Use only lamps with the same specifications.

### 2.6 Service

- To repair the appliance contact the Authorised Service Centre.
- Use original spare parts only.

### 2.7 Disposal

**⚠ WARNING!**

Risk of injury or suffocation.

- Contact your municipal authority for information on how to dispose of the appliance.
- Disconnect the appliance from the mains supply.
- Cut off the mains electrical cable close to the appliance and dispose of it.

## 3. PRODUCT DESCRIPTION

### 3.1 General overview

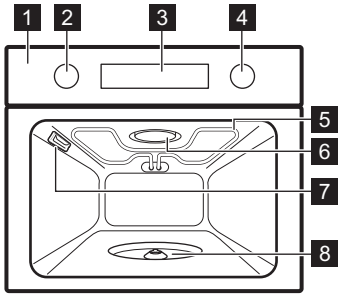


1 Control panel
2 Knob for the heating functions
3 Display
4 Control knob
5 Heating element
6 Microwave generator
7 Lamp
8 Turntable shaft

## 4. CONTROL PANEL

### 4.1 Turning the appliance on and off

To turn on the appliance:

1. Press the knobs. The knobs come out.
2. Turn the knob for the heating functions to select a function.
3. Turn the control knob to adjust settings.

To turn off the appliance: turn the knob for the heating functions to the off position 0.

### 4.2 Control panel overview

| | |
|---|---|
| | Press to set timer functions. |
| | Press and hold to set the function: Lock. |
| | Press to turn the appliance lamp on and off. |
| WATT | Press to set: Microwave power. |
| OK | Press to confirm your selection. |

### 4.3 Display indicators

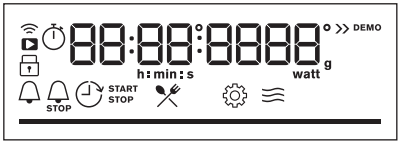


Display with key functions.

| | |
|---|---|
| | The appliance is locked. |
| | Submenu: Assisted Cooking. |
| | Submenu: Settings |
| | Microwave function is activated. |
| | Minute minder is activated. |
| STOP | Cooking time is activated. |
| | Time Delayed Start is activated. |
| | Uptimer is activated. |
| | Wi-Fi is activated. |
| | Remote operation is activated. |
| | Progress bar - visually indicates when the cooking time comes to an end. |

## 5. BEFORE FIRST USE

**⚠ WARNING!**
Refer to Safety chapters.

### 5.1 Setting the time

After the first connection to the mains, wait until the display shows: **"00:00"** or **"12:00"** (depending on the model).

1. Turn the control knob to set the time.
2. Press OK.

### 5.2 Initial preheating and cleaning

Preheat the empty appliance before the first use and contact with food. The appliance can emit unpleasant smell and smoke. Ventilate the room during preheating.

1. Remove all accessories from the appliance.
2. Set the function . Let the appliance operate for 1 h.
3. Turn off the appliance and wait until it is cold.
4. Clean the appliance and the accessories only with a microfibre cloth, warm water and a mild detergent.
5. Put the accessories back to their initial position.

### 5.3 Wireless connection

To connect the appliance you need:
- Wireless network with the Internet connection.
- Mobile device connected to the same wireless network.

1. To download the app scan the QR code located on the back cover of the user manual. You can also download the app directly from the app store.
2. Follow the app onboarding instructions.
3. Turn the knob for the heating functions to select .

4. Turn the control knob to select ⚙ / Wi-Fi. Turn it on or off. Refer to "Daily use" chapter, Changing: Settings.

Wi-Fi is turned on by default. Refer to "Energy efficiency" chapter, Energy saving tips.

ⓘ

For safety reasons, remote operation turns off automatically after 24 h. Repeat the onboarding, if needed.

| | |
|---|---|
| Frequency | 2.4 GHz WLAN |
| | 2400 - 2483.5 MHz |
| Protocol | IEEE 802.11b DSSS, 802.11g/n OFDM |
| Max Power | EIRP < 20 dBm (100 mW ) |
| Wi-Fi module | NIUS-50 |

### 5.4 Software licences

The software in this product contains components that are based on free and open source software. AEG acknowledges the contributions of the open software and robotics communities to the development project.

To access the source code of these free and open source software components whose license conditions require publishing, and to see their full copyright information and applicable license terms, visit: http://aeg.opensoftwarerepository.com (folder NIUS).

## 6. DAILY USE

⚠ **WARNING!**

Refer to Safety chapters.

### 6.1 Heating functions

#### Standard heating functions

| | |
|---|---|
| | **Grill**<br>To grill thin pieces of food and to toast bread. |

#### Microwave functions

| | |
|---|---|
| | **Defrost**<br>Defrosting various types of food, power range: 100 - 200 W |
| | **Reheat**<br>Heating up pre-prepared meals, power range: 300 - 700 W |
| | **Liquid**<br>Heating up drinks and soups, power range: 600 - 1000 W |
| | **Melting**<br>Melting chocolate and butter, power range: 100 - 400 W |
| | **Popcorn**<br>Preparing popcorn bags, power range: 600 - 800 W |
| | **Microwave**<br>Heating up, cooking, power range: 100 - 1000 W |
| | **Grill High**<br>To cook food in short time and brown it with high grill intensity. Power range: 100 - 400 W. |
| | **Grill Low**<br>To cook food in short time and brown it with low grill intensity. For casseroles such as potato gratin, lasagne. Power range: 100 - 400 W. |

For general energy saving recommendations refer to "Energy Efficiency" chapter, Energy saving tips.

### 6.2 Setting: Heating functions

Turn the knob for the heating functions to select the function .

### 6.3 Setting: Microwave functions

1. Insert the food into the appliance.
2. Turn the knob for the heating functions to select the microwave function.

The display shows: duration and microwave power.

3. Press OK to start with default settings.

4. To adjust the duration turn the control knob. Press OK.
5. To adjust the microwave power press **WATT** and turn the control knob. Press OK.

You can adjust settings while cooking.

If you open the door, the microwave function stops. To start it again, close the door. Press OK.

## 6.4 Entering: Menu

Open the Menu to access Assisted Cooking dishes and settings.

1. Turn the knob for the heating functions to .

The display shows , .

2. Turn the control knob and select the icon to enter submenu. Press OK.

## 6.5 Setting: Assisted Cooking

Assisted Cooking submenu consists of programmes that are designed for dedicated dishes. Programmes start with a suitable setting. You can adjust the time and microwave power during cooking.

1. Turn the knob for the heating functions to .
2. Turn the control knob to select . Press OK.
3. Turn the control knob to select a dish (P1 - P...). Press OK.
4. Place the food inside the appliance. Press OK.
5. When the function ends, check if the food is ready. Extend the cooking time, if needed.

### Submenu: Assisted Cooking

| Legend | |
|---|---|
| | Function with microwave power. Use microwave safe accessory. |

The display shows **P** and a **number** of the dish that you can check in the table.

| | Dish | Weight | Accessory |
|---|---|---|---|
| **P1** | **Chicken, whole** | 1 - 1.4 kg | low rack on turntable, with plate below<br>Place a plate in the centre of the turntable under the rack. Place the chicken directly on the low rack with the breast side down. After 40 min, turn the chicken upside down. |
| **P2** | **Chicken, two halves** | 1 - 1.4 kg | ceramic or glass casserole dish on turntable |
| **P3** | **Fish, whole** | 0.4 - 0.5 kg | ceramic or glass casserole dish on turntable<br>Add 50 ml of water. Cover the food with a microwave safe lid or clingfilm with some holes. |
| **P4** | **Fish fillet** | 0.5 kg | |
| **P5** | **Broccoli** | 0.5 kg | |
| **P6** | **Cauliflower** | 0.5 kg | |
| **P7** | **Cauliflower, frozen** | 0.5 kg | |
| **P8** | **Peas, frozen** | 0.5 kg | |
| **P9** | **Jacket potatoes** | 0.5 kg | |

| | Dish | Weight | Accessory |
|---|---|---|---|
| P10 | **Rice** | 0.2 kg | ceramic or glass casserole dish on turntable<br>Add 400 ml of water. Cover the food with a microwave safe lid or clingfilm with some holes. |
| P11 | **Potato gratin** (raw potatoes) | 1.1 kg | ceramic or glass casserole dish on turntable |
| P12 | **Lasagna** with dry pasta sheets | - | ceramic or glass casserole dish on turntable |

### 6.6 Changing: Settings

1. Turn the knob for the heating functions to .
2. Turn the control knob to select . Press OK.
3. Turn the control knob to select the setting. Press OK.
4. Turn the control knob to adjust the value. Press OK.
5. Turn the knob for the heating functions to the off position to exit Menu.

Submenu: Settings

| | Setting | Value |
|---|---|---|
| 01 | Time of day | Change |
| 02 | Display brightness | 1 - 5 |
| 03 | Key tones | 1 - Beep, 2 - Click, 3 - Sound off |
| 04 | Buzzer volume | 1 - 4 |
| 05 | Uptimer | On / Off |
| 06 | Light | On / Off |
| 07 | Wi-Fi | On / Off |
| 08 | Auto remote operation | On / Off |
| 09 | Forget network | Yes / No |
| 10 | Demo mode | Activation code: 2468 |
| 11 | Software version | Check |
| 12 | Reset all settings | Yes / No |

## 7. ADDITIONAL FUNCTIONS

### 7.1 Lock

This function prevents an accidental change of the appliance function.

When activated while the appliance is in use, it locks the control panel, ensuring that the current cooking settings continue uninterrupted.

When activated while the appliance is off, it keeps the control panel locked, preventing the appliance from being turned on unintentionally.

- press and hold to turn on the function.

A signal sounds. - flashes 3 times when the lock is turned on.

- press and hold to turn off the function.

### 7.2 Automatic switch-off

For safety reasons, if the heating function is active and no settings are changed, the appliance will turn off automatically after a certain period of time.

| (°C) | (h) |
|---|---|
| 30 - 115 | 12.5 |
| 120 - 195 | 8.5 |
| 200 - 230 | 5.5 |

If you intend to run a heating function for a duration exceeding the automatic switch-off time, set the cooking time. Refer to the 'Clock functions' chapter.

The Automatic switch-off does not work with the functions: Light, Time Delayed Start.

### 7.3 Cooling fan

When the appliance operates, the cooling fan turns on automatically to keep the surfaces of the appliance cool. If you turn off the appliance, the cooling fan can continue to operate until the appliance cools down.

## 8. CLOCK FUNCTIONS

### 8.1 Timer functions description

| | |
|---|---|
| **Minute minder** | To set a countdown timer. When the timer ends, the signal sounds. This function has no effect on the operation of the appliance and can be set at any time. |
| **Cooking time 1)** | To set cooking duration. When the timer ends, the signal sounds and the heating function will automatically turn off. |
| **Time Delayed Start 2)** | To postpone the start and / or end of cooking. |
| **Uptimer** | To show how long the appliance operates. Maximum is 23 h 59 min. This function has no effect on the operation of the appliance and can be set at any time. |

**1)** This function is available only for: Grill, Grill Low, Grill High.

**2)** This function is available only for: Grill.

### 8.2 Setting: Minute minder

1. Press ⏲.

The display shows: 0:00 and 🔔.

2. Turn the control knob to set the Minute minder.
3. Press OK. The timer starts counting down immediately.

### 8.3 Setting: Cooking time

1. Turn the knobs to select the heating function and to set the temperature.
2. Press ⏲ until the display shows: 0:00 and STOP.
3. Turn the control knob to set the Cooking time.
4. Press OK. The timer starts counting down immediately.
5. When the time ends, press OK and turn the knob for the heating functions to the off position.

### 8.4 Setting: Time Delayed Start

1. Turn the knobs to select the heating function and to set the temperature.
2. Press ⏲ until the display shows: and START.
3. Turn the control knob to set the start time.
4. Press OK.

The display shows: **--:--** STOP.

5. Turn the control knob to set the end time.
6. Press OK.

The timer starts counting down at a set start time.

7. When the time ends, press OK and turn the knob for the heating functions to the off position.

### 8.5 Setting: Uptimer

1. Turn the knob for the heating functions to ☰ to enter Menu.
2. Turn the control knob to select ⚙ / Uptimer. Refer to "Daily Use" chapter, Menu: Settings.
3. Press OK.
4. Turn the control knob to turn the Uptimer on and off.
5. Press OK.

### 8.6 Setting: Time of day

1. Turn the knob for the heating functions to to enter Menu.
2. Turn the control knob to select / Time of day. Refer to "Daily use" chapter, Menu: Settings.
3. Turn the control knob to set the clock.
4. Press OK.

## 9. USING THE ACCESSORIES

**⚠ WARNING!**

Refer to Safety chapters.

### 9.1 Inserting accessories

Use only suitable cookware and material. Refer to "Hints and tips" chapter, Microwave suitable cookware and materials.

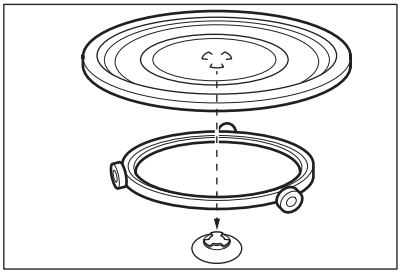

Use only the turntable set supplied with the appliance. Always cook food on the turntable set. Place the roller guide around the turntable shaft. Place the turntable glass on the roller guide. To allow the turntable set to operate properly, ensure that the indentations on the base of the glass plate are matched with the turntable shaft.

**Grill rack set**

The set includes: Low rack, High rack. Place the grill rack with the feet down on the turntable set.

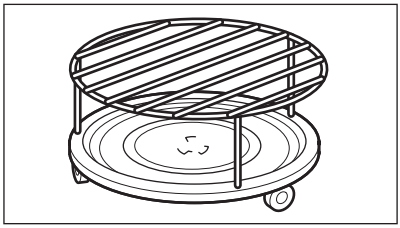

For Microwave heating functions only low grill rack is recommended.

## 10. HINTS AND TIPS

### 10.1 Cooking recommendations

Cooking and baking processes are only suitable on one level.

The temperature and cooking times in the tables are for guidance only. They depend on the recipes, quality and quantity of the ingredients used.

Your appliance may cook differently than your previous appliance. The hints below show recommended heating functions and settings for cooking time for specific types of the food.

If you cannot find the settings for a specific recipe, look for a similar one.

For energy saving tips refer to "Energy efficiency" chapter.

**Symbols used in the tables:**

| | |
|---|---|
| | Food type |
| | Heating function |
| | Accessory |
| POWER | Microwave power (W) |
| | Cooking time (min) |

## 10.2 Information for test institutes

**Baking on one level**

Tests according to: EN 60350-1, IEC 60350-1, EN 60705, IEC 60705.

When using the rack, place the food directly on it. Place the rack in the centre of the turntable.

| | | | POWER | |
|---|---|---|---|---|
| Toast **1) 2)** | Grill | High rack | - | 5 - 6 |
| Sponge cake | Microwave | Low rack | 600 | 6 - 7 |
| Meatloaf | Microwave | - | 400 | 28 - 33 |
| Egg custard | Microwave | Low rack | 400 | 17 - 22 |
| Defrosting minced meat (500 g)**3)** | Microwave | Low rack | 200 | 7 - 9 |
| Potato gratin | Grill Low | - | 300 | 35 - 40 |
| Chicken (1100 g)**4)** | Grill High | Low rack | 200 | 40 |
| | Grill | | - | 28 - 33 |

**1)** Preheat the appliance for 5 min.

**2)** According to: IEC 60350-1:2016 and IEC 60350-1:2023.

**3)** After half of the time, turn the meat upside down over the longest side.

**4)** Place a plate in the centre of the turntable under the rack. Place chicken directly on low rack with breast side down. After 40 min, turn the chicken upside down and change the heating function to: Grill.

**Additional recipes**

| | | | POWER | |
|---|---|---|---|---|
| Plated meals, chilled (1 portion) **1)** | Microwave | - | 400 | 12 |
| | | | 600 | 1 - 3 |
| Liquids in baby bottles **2)** | Microwave | - | 1000 | 0.5 |
| Lasagne, frozen (400 g) | Grill High | - | 200 | 30 - 35 |
| Lasagne, frozen (600 g) | Grill Low | - | 200 | 44 - 49 |
| Pizza, frozen | Grill High | Low rack | 200 | 12 - 14 |
| Grilled vegetables, mixed | Grill Low | - | 300 | 20 - 25 |
| Ratatouille | Grill High | - | 300 | 23 - 28 |
| Stuffed mushrooms | Grill High | - | 300 | 15 - 20 |
| Stuffed cannelloni | Grill Low | - | 200 | 33 - 38 |

**1)** Cover the food with a microwavable plastic lid.

**2)** Place the bottle on the turntable, 3 cm from its edge.

## 10.3 Microwave recommendations

Do not place the food directly on the turntable set. Always use the microwave suitable cookware.

Place the cookware in the center of the turntable set.

Contact with too hot or too cold items can break the turntable set.

Turn or stir the food halfway through the cooking time to improve the results.

Stir liquid dishes from time to time.

Stir the food before serving.

Put the spoon into the cup or glass when heating up liquids, to improve heat distribution and avoid overboiling. The spoon must not touch any part of the oven interior, this may cause sparking.

Place the food into the appliance without packaging. The packaged ready meals can be put into the appliance only when the packaging is microwave safe. Refer to "Hints and tips", Microwave suitable cookware and materials section.

Do not cover the food when using Microwave combi functions. Refer to "Daily use" chapter.

Do not use Microwave functions when there is no food inside the appliance.

**Microwave cooking**
Cover the food for cooking or reheating with microwave functions. If you want to keep a crust, cook food without a cover.

Do not overcook the dishes by setting the power and time too high. The food can dry out, burn or cause fire.

Do not use the appliance to cook eggs or snails in their shells, because they can burst. Pierce the yolk of fried egg before reheating it.

Pierce food with skin or peel several times before cooking.

Cut vegetables into similar-sized pieces.

After you turn off the appliance, take the food out and let it stand for a few minutes to allow the heat distribute evenly.

**Microwave defrosting**
Place the frozen, unwrapped food on a small upturned plate with a container below it, or on a defrosting rack or plastic sieve so that the defrosting liquid can leak out.

Remove defrosted pieces subsequently.

To cook fruit and vegetables without defrosting them first, you can use a higher microwave power.

Turning improves the results. For sensitive foods such as meat, turn upside down twice during defrosting.

## 10.4 Microwave suitable cookware and materials

For the microwave use only suitable cookware and materials. Use below table as a reference.

Check the cookware / material / food container specification before use.

For other specific microwave cookware not listed in this table, follow manufacturer instructions.

| Cookware / Material |  |  |  |
|---|---|---|---|
| Ovenproof glass and porcelain with no metal components, e.g. heat-proof glass | ✓ | ✓ | ✓ |
| Non-ovenproof glass and porcelain without any silver, gold, platinum or other metal decorations | ✓ | ✗ | ✗ |
| Glass and glass ceramic made of ovenproof / frost-proof material | ✓ | ✓ | ✓ |
| Ovenproof ceramic and earthenware without any quartz or metal components and glazes which contain metal | ✓ | ✓ | ✓ |

| Cookware / Material | | | |
|---|---|---|---|
| Ceramic, porcelain and earthenware with unglazed bottom or with small holes, e.g. on handles | X | X | X |
| Heat-resistant plastic up to 200 °C | ✓ | ✓ | X |
| Cardboard, paper only | ✓ | X | X |
| Clingfilm | ✓ | X | X |
| Microwave clingfilm | ✓ | ✓ | X |
| Roasting dishes made of metal, e.g. enamel, cast iron | X | X | X |
| Baking tins, black lacquer or silicon-coated | X | X | X |
| High rack | X | X | X |
| Low rack | ✓ | ✓ | ✓ |

### 10.5 Power settings

Below data is for guidance only.

**900 - 1000 W**
- Heating up liquids

**800 W**
- Simmering rice
- Popcorn

**500 - 700 W**
- Cooking vegetables
- Heating one-plate meals
- Simmering stews
- Defrosting and heating ready frozen meals

**300 - 400 W**
- Cooking / Heating delicate food
- Continuing cooking
- Heating baby food

**100 - 200 W**
- Defrosting bread, fruit, cakes, pastries, cheese, butter, meat and fish

## 11. CARE AND CLEANING

> ⚠ **WARNING!**
> Refer to Safety chapters.

### 11.1 Notes on cleaning

**Cleaning Agents**
- Clean the front of the appliance only with a microfibre cloth with warm water and a mild detergent.
- Use a cleaning solution to clean metal surfaces.
- Clean stains with a mild detergent.

**Everyday Use**
- Clean the interior of the appliance after each use. Fat accumulation or other residue may cause fire.
- Clean the appliance ceiling carefully from residue and fat.
- Do not store food in the appliance for longer than 20 minutes. Dry the interior of the appliance only with a microfibre cloth after each use.

**Accessories**
- Clean all accessories after each use and let them dry. Before cleaning, wait until the turntable is cold. There is a risk that the turntable can break. Keep the roller guide and the bottom of the cavity clean to ensure smooth turning of the turntable.

Use only a microfibre cloth with warm water and a mild detergent. Do not clean the accessories in a dishwasher.

- Do not clean the non-stick accessories using abrasive cleaner or sharp-edged objects.

### 11.2 Replacing the lamp

**⚠ WARNING!**

Risk of burns, the glass cover may be hot. Use protective glove when touching the lamp.

Only service is allowed to replace the lamp. Contact your Authorised Service Centre.

## 12. TROUBLESHOOTING

**⚠ WARNING!**

Refer to Safety chapters.

### 12.1 What to do if...

| Problem | Check if... |
|---|---|
| You cannot activate or operate the appliance. | The appliance is correctly connected to an electrical supply. |
| The appliance does not heat up. | The automatic switch-off is deactivated. |
| The appliance does not heat up. | The fuse is not blown. |
| The appliance does not heat up. | Lock is deactivated. |
| The lamp does not work. | The lamp is burnt out. Contact an Authorised Service Centre. |
| The turntable set makes noise. | There is food residue below the turntable set. |
| The display shows 00:00. | There was a power cut. Set the time of day. |

ⓘ

If the display shows an error code that is not in this table, turn the house fuse off and on to restart the appliance. If the error code recurs contact an Authorised Service Centre.

### 12.2 Service data

If you cannot find a solution to the problem yourself, contact your dealer or an Authorised Service Centre.

The necessary data for the service centre is on the rating plate. The rating plate is located on the front frame of the appliance. It is visible when you open the door. Do not remove the rating plate from the appliance.

**We recommend that you write the data here:**

| |
|---|
| Model (MOD.) : |
| Product number (PNC): |
| Serial number (S.N.): |

# 13. ENERGY EFFICIENCY

## 13.1 Product Information for power consumption and maximum time to reach applicable low power mode

| | |
|---|---|
| Power consumption in standby | 0.8 W |
| Power consumption in network standby | 2.0 W |
| Maximum time needed for the equipment to automatically reach the applicable low power mode | 20 min |

For guidance on how to activate and deactivate the wireless network connection, refer to "Before first use" chapter.

## 13.2 Energy saving tips

Following tips below will help you save energy when using your appliance.

Make sure that the appliance door is closed when the appliance operates. Do not open the appliance door too often during cooking. Keep the door gasket clean and make sure it is well fixed in its position.

Use metal cookware and dark, non-reflective tins and containers to improve energy saving (only when you use a non-microwave function).

Do not preheat the appliance before cooking unless specifically recommended.

Keep breaks between baking as short as possible when you prepare a few dishes at one time.

**Cooking with the lamp off**
Turn off the lamp during cooking. Turn it on only when you need it.

**Wi-Fi**
When possible, turn off the Wi-Fi to save energy.

# 14. ENVIRONMENTAL CONCERNS

Recycle materials with the symbol . Put the packaging in relevant containers to recycle it. Help protect the environment and human health by recycling waste of electrical and electronic appliances. Do not dispose of appliances marked with the symbol  with the household waste. Return the product to your local recycling facility or contact your municipal office.

aeg.com

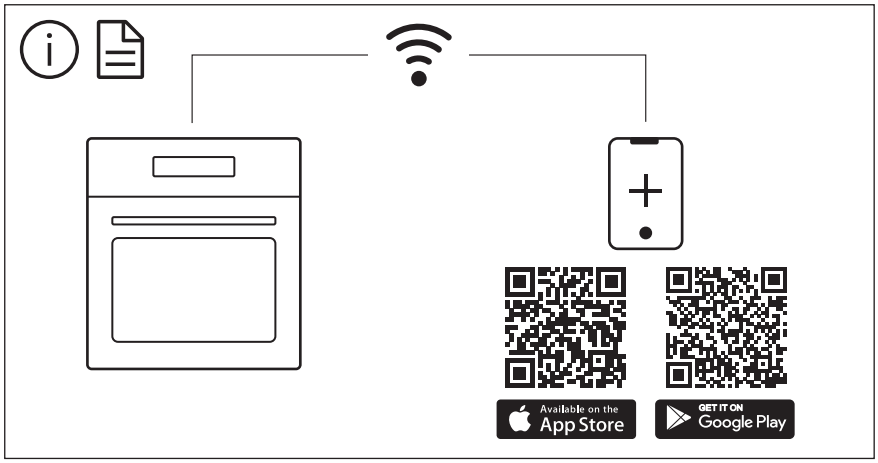


867381676-A-272024